Research Article

A NETWORKING LABORATORY USING AN INTEGRATED MIXTURE OF PHYSICAL EQUIPMENT AND SIMULATORS[1]

Ka Ching Chan and Sean Haythorne

Department of Computer Science and Information Technology

La Trobe University

PO Box 199, Bendigo 3552, Victoria

Email: ka.chan@latrobe.edu.au, s.haythorne@latrobe.edu.au

[1] This is the author manuscript accepted for publication and has undergone full peer review but has not been through the copyediting, typesetting, pagination and proofreading process, which may lead to differences between this version and the Version of Record. Please cite this article as doi:10.1002/cae.21829

Abstract

This paper presents the design and development of a networking laboratory that integrates a combination of physical networking equipment with the open source GNS3 network simulators for on-campus, blended-learning, and potentially online delivery of networking classes. This transformative work has resulted in a significant increase in laboratory capacity, thus reducing the need for repeating classes. The integrated platform offers students both hands-on experience using real equipment, and the convenience of easy setup and reconfiguration using simulators. An example practical exercise in setting up an OSPF/BGP network is presented to illustrate the experimental design before and after the integration of GNS3 simulators. In summary, we describe the infrastructure, the integrated platform and systems, network design and experiment design; and the learning and teaching experiences of using GNS3 in classes.

Keywords: computer networks; network simulation; virtualization; networking laboratories.

1 Introduction

The undergraduate Information Technology program at La Trobe University is a three year program. In the networking stream, there is one level-2 subject (Computer Networks) and two level-3 subjects (Internetworking, and IT and Information Security). The IT course focusses on industry relevance [1], and thus hands-on laboratories are an integral part of these networking subjects. In the past, networking experiments were delivered in a designated networking laboratory using physical networking equipment. Due to the high cost of equipment and limited space, it was necessary to repeat laboratory sessions. The department's networking laboratory supports not only teaching, but also project and research activities, such as cloud robotics [2], broadband access networks [3], communications [4, 5], and application development [6, 7].

There has been significant research effort reported in the literature in developing virtual laboratories for teaching subjects in engineering, computer science, and information technology. Most of these systems have one of more of these features: (1) allowing remote access, (2) using cloud computing and virtualization technologies, and (3) using physical equipment, simulators, or a combination of both. In engineering, one of the most popular subject areas for virtual laboratories is control systems. In the literature, a virtual control laboratory was developed for students to design and simulate classical proportional-integral-derivative (PID) controllers and fuzzy logic controllers (FLC) [8]; a simulation platform using MATLAB and Simulink was developed to investigate the performance of quadcopters using self-tuning fuzzy PID controllers [9]; an interactive virtual control laboratory that provides haptic interfaces to students was developed to teach classical control systems and advanced topics such as impedance control and fuzzy control [10]; a remote laboratory that allows students to access real industrial equipment through the Internet was reported in [11]. The development of other virtual laboratories for control [12, 13] and process automation

[14] were also reported in the literature. In addition, systems and laboratories for teaching electronics [15], gear train design [16], robotics [17], and computer organisation and architecture [18], were also reported recently.

In the area of networking, previous research includes the development of: a virtual networking laboratory that allows remote access to real physical networking devices for distance education, as reported in [19]; a virtual learning environment that was developed using VMware, Linux based routers, and Windows remote desktop to access the VMware host system, as reported in [20]; a virtual networking laboratory that was developed using Open source Xen virtualization hypervisor, Linux based routers and IP-tables, as reported in [21]; and a multi-user, remote access virtualization system that was developed using Windows remote desktop, and VMware Workstation, and Remote Laboratory Emulation system (RLES), as reported in [22]. The development of a number of other virtual networking laboratories were also reported in [23-28]. Recently a number of virtual laboratories were developed for other networking related areas including information security [29, 30], wireless mesh network [31], storage area network [32], and voice over IP (VoIP) [33].

The direction of the University's learning and teaching strategies have been gradually steered towards a digital future. The flipped classroom model and blended learning approaches, as well as other online course delivery options, have been adopted in an increasing number of subjects. We have previously attempted to develop a virtual networking laboratory using formerly open source software *Vyatta* [34]. In 2012, *Vyatta* was acquired by Brocade and renamed *Brocade virtual router* [35] and is no longer freely available. In 2013, an independent group started a 'fork' and continued developing a community version under the name *VyOS* [36].

This paper presents our current efforts, aligned with the University's strategic plans, to modernise the delivery of our department's networking laboratories. To achieve this goal, we have modified the layout of two laboratories and redesigned the network, adding a variety of equipment and software. We added a virtualisation server (VMWare ESXi) [37] and two network attached storage (NAS) servers (QNAP TS-420U) [38]. We installed multiple network simulators (GNS3) [39] as virtual machines, and integrated GNS3 with the existing Cisco physical networking equipment. We also redesigned the laboratory exercises. Due to the restructure, laboratory capacity has been significantly increased. Students can now perform their experiments in any of the networking, PC or Mac laboratories within the department, or remotely from other campuses or their homes. The tasks involved are described in the following sections. This paper describes the transformative work involved in the process, and reports our experiences in delivering practical classes using the new approach.

2 Laboratory Network Design

This section describes the laboratory layout, network setup, and the networking equipment and software that support the delivery of the department's practical learning exercises.

2.1 Networking Laboratory

There are three laboratories in the department, the floor plan of which is shown in Fig. 1. The networking laboratory, on the left, has a capacity for up to four groups of three students to carry out their hands-on laboratory sessions concurrently using the physical equipment. The adjoining server room hosts a full rack of networking equipment to support all teaching and research activities relating to networking. Due to limited hardware and space availability, two to three repeat sessions per week were required for each subject. The other two computer laboratories (the PC and Mac laboratory), are within close proximity to the networking

laboratory, as shown in Fig. 1. The layouts of these two laboratories have been modified to include small movable round tables for group work. Our objective was to use GNS3 to extend the capacity of the networking laboratory sessions, thus allowing a larger group of students (generally our whole class) to concurrently work on the same laboratory session, in either the networking, PC or Mac laboratories, or remotely online. By using GNS3, a single laboratory session potentially increases the capacity to host over 50 on-campus students. Additional remote students, from home or other campuses, can also participate and work collaboratively online with on-campus students.

2.2 Network Setup and Networking Equipment

The network diagram for our design is illustrated in Fig. 2. The Internet traffic is handled via a Cisco 7206VXR router located in a carrier-neutral data center in Sydney, multi-homed to multiple tier-1 carriers. A full class C public IPv4 and a /48 IPv6 have been allocated for our exclusive use. Public IP addresses are mapped to our servers through a GRE tunnel, so that traffic going in and out of our network is separated from the campus network. Thus, advantageously, the security of the campus network will not be compromised due to our teaching and research activities, which sometimes intentionally produces security vulnerabilities.

The laboratory network is divided into a demilitarised zone (DMZ), as shown in the top left corner of Fig. 2, and a private zone, as shown in the bottom half of Fig. 2. A number of servers that require public IP addresses, including a public web server, a Wikipedia server, a VoIP server, and additional servers supporting research and student projects are located in the demilitarised zone. The networking systems used for student experiments are located in the private network zone.

In terms of physical equipment, the networking laboratory is equipped with four racks of routers and switches. Each rack is mounted with the following physical networking equipment:

- A Cisco 2801 router (4 Fast Ethernet ports and 1 ADSL port)
- A Cisco 2610 router (5 Ethernet ports)
- Two Cisco 1841 routers (2 Fast Ethernet ports)
- A Cisco Catalyst 2960 switch (24 Fast Ethernet ports, 2x1G Uplink ports)
- Two Cisco Catalyst 3750G switches (24x1G PoE ports, 4x1G SFP)

These existing physical systems give students the opportunity to carry out some of their experiments using real systems, thus providing them with hands-on experience that is especially valuable for beginners in the area of networking.

In the sections that follow, we will discuss how we increased our laboratory capacity by integrating the existing networking equipment with a virtualisation platform running the network simulator GNS3.

2.3 Virtualisation Platform and Network Simulator

In the first phase of this work, we investigated the feasibility of using GNS3 for teaching on three old PCs with Intel Core i7 CPUs running Ubuntu OS (Desktop version 14.04 LTS) [40]. We allocated these three GNS3 servers (version 1.2.3) to student group 5 to 7, as shown in Fig. 2. Once we were confident about their performance and reliability, we implemented the same GNS3 simulators on a virtualisation platform that includes a VMWare ESXi server and two QNAP storage servers. Setting up multiple virtual machines on a VMWare facilitated simple and easy management of simulators. As a result, expansion and maintenance tasks have become greatly simplified, and now mostly involve copying files, taking snapshots, and maintaining backups, which are all performed on one machine.

Each GNS3 simulator is setup as one VMWare virtual machine. All virtual machines are stored in one of the two QNAP rack-mounted storage servers, connected through iSCSI to the VMWare ESXi server. Each group (Group 8 and above) of students is allocated a VMWare

virtual machine with GNS3 installed on Ubuntu. All the GNS3 simulators are connected to the same backbone, a gigabit Ethernet IP network (192.168.0.0/16), via the virtual switch of the VMWare ESXi server, as shown in the middle part of Fig. 2. The backbone, interconnecting all the subnetworks configured by student groups, provides a path for the exchange of information between different subnetworks. A key design feature of our network is that all the physical systems, GNS3 on physical servers, and GNS3 on VMWare virtual servers are connected to the same backbone. A Wifi access point has been setup to link all three rooms to the backbone. As shown in later sections, the experiments have also been redesigned in such a way that all students can work on the same experiments and achieve the same learning outcomes regardless of the systems they use. This backbone also enables us to integrate other non-Cisco systems such as *VyOS* [18] and *pfSense* [41] in the experiments. *VyOS* is a community development 'fork' of the Linux based router *Vyatta* that provides software-based routing, firewall, and VPN functionality. *pfSense* is an increasingly popular open source network security solution. Being non-Cisco technology, both *VyOS* and *pfSense* can be setup as virtual machines, thus offering our students the opportunity to learn important networking concepts in a vendor-neutral environment.

The students in Group 8 and above access the GNS3 simulators using *Teamviewer* [42], a remote access and screen sharing software for online meeting, web conferencing, and online collaboration. A *Teamviewer* online meeting can hold up to 25 participants (which is generally a lot more than required), and allow participants to communicate via chat, video conferencing or voice over IP (VoIP). *Teamviewer* was chosen because public IP addresses are not required for remote access from outside. On-campus students can access their designated GNS3 from the PC or Mac laboratory, and potentially collaborate with online group members concurrently using *Teamviewer*.

3 Design of Hands-on Laboratory Experiments

The original laboratory experiments were designed with group collaboration in mind. Networking professionals need to maintain working relationships with a variety of people, such as other networking engineers, telecommunication providers, customers, and other stakeholders. Hands-on experiments, complementing theoretical concepts presented in lectures, play an integral part in all the subjects in the department's networking stream. The laboratory experiments cover the various key topics, such as VLAN, Static routes, access lists, IPv6, RIP, OSPF, BGP, route redistributions, route maps, and VPN.

To highlight how GNS3 helps increase the capacity of laboratory sessions and enables online delivery, the sections that follow present two versions of an example networking laboratory exercise. Firstly the original form utilising physical systems only is presented. Following that the redesigned version, which includes the integration of virtual systems, is presented.

3.1 Original OSPF/BGP Setup

This section presents one of the practical classes for the subject CSE3INW Internetworking. In this exercise, students are required to setup an internal network running OSPF within an Autonomous System (AS) using two routers, a primary router (PR) and a secondary router (SR). The interior network is then connected to the outside world, via two other ASs using the external routing protocol BGP. The OSPF networks are then redistributed into the BGP network and vice versa. This scenario is a typical multi-homed network running BGP as the external routing protocol and OSPF as the internal protocol. The details required for the configurations are shown in Fig. 3 and Table 1. The laboratory tasks are listed below:

1. Configure each router interface with the appropriate IP address.
2. Configure BGP and establish sessions with the appropriate peers.
3. Enter the appropriate commands so that BGP advertises all directly connected networks.

4. Ensure that your router is learning routes from your peers.
5. Ensure that other routers are learning routes that are being advertised by your router.
6. Connect your workstation to your switch and configure it with an appropriate IP address. Verify that you can ping another group's workstation (or at least one of their "internal" router interfaces).
7. Try using *traceroute* and see if you can discover what path your packets are taking between workstations.
8. Try to identify the AS Path that your router uses for each Autonomous System.
9. Configure your primary router. Ensure that your BGP sessions are correctly established.
10. Configure each interface on your secondary router with the appropriate IP address.
11. Configure OSPF on both your primary and secondary routers. Ensure that passive-interface statements are specified for your BGP peering interfaces.
12. Enter the appropriate commands so that BGP advertises all networks that have been learned via OSPF.
13. Configure OSPF so that it redistributes all routes learned via BGP.
14. Ensure that other routers are learning routes that are being advertised by your router.
15. Connect your workstation into your switch and configure it with an appropriate IP address. Verify that you can ping another group's workstation (or at least one of their "internal" router interfaces).
16. Try using *traceroute* and see if you can discover what path your packets are taking between workstations.
17. Record your router's running configuration, routing table and BGP table.

Each group has to perform the above tasks independently. Due to the design of the experiment, no group can complete its tasks until all other groups have their networks successfully configured. Due to the diversity of student prior experience and learning styles, this inter-group dependency generally presents a challenge for teaching staff, who are required to assist and troubleshoot, and to ensure all networks work properly so students can perform testing, and collect information and data for their reports. In the next section, we will describe how GNS3 can help overcome these issues and provide a scalable environment to meet resource demands and enable the delivery of practical classes online.

3.2 Redesign of the OSPF/BGP Setup

This section presents the redesign of the previous laboratory exercise for multi-campus and online delivery. To eliminate the activity's inter-group dependency and enable students to learn at their own paces, three shared BGP/OSPF demo networks were pre-configured in

GNS3 for all students to utilise. Working in groups, students were required to setup their own networks to connect with these demo networks, and investigate how the routing protocols work. Previously each group set up its BGP peers with two other groups, as shown in Fig. 4, and were therefore dependent on each other. The key modification is for all groups to connect to the same BGP neighbours on demo networks. These demo networks are pre-configured before the laboratory sessions and are on the same backbone as the physical equipment and the GNS3 simulators. Fig. 5 shows the three demo networks and the network of group *n*. Table 2 shows the IP addresses and the AS number that group *n* should use. In this new design, each group can just focus on getting its own networks to work, without the hindrance of dependency on other groups.

The first four groups, $n = 1$ to 4, carry out their laboratory tasks on the physical equipment. The other groups, $n \geq 5$, carry out their work on GNS3 simulators. The use of GNS3 overcomes the capacity issue, and more groups can be accommodated either in the nearby PC and Mac laboratory (see Fig. 1). Students in these rooms, and potentially other off-campus students, can connect to the GNS3 servers via *Teamviewer*. Fig. 6 shows a GNS3 screenshot of the laboratory exercise.

4 Learning and Teaching Experience

The simulator GNS3 was first introduced in a final year undergraduate subject CSE3INW Internetworking. Students taking this subject had already developed basic skills in configuring Cisco routers and switches from the fundamental networking subject CSE2CN Computer Networks. They were familiar with Cisco hardware, basic routing and cabling. To compare the learning experiences of students using the integrated platform, all students were given the opportunities to use the physical equipment and the GNS3 simulation to conduct experiments. Each week two out of six groups were chosen to run their laboratory sessions on GNS3. Before they started their work, a ten minute introduction and demonstration on using

GNS3 was given by the lecturer. They were then shown how to create a new GNS3 project, set up networks, bring up consoles, connect devices, and capture packets using *Wireshark* [43]. A short demonstration was sufficient for the students due to the intuitive design of GNS3.

4.1 Evaluation

At the end of a twelve week semester, a questionnaire was developed to seek feedback from this group of students who attended the CSE3INW classes in 2016. Nineteen students enrolled in the subject and sixteen students completed the survey. The survey evaluation questions utilised are as follows:

1. How much experience have you had using physical networking equipment before using GNS3?

(None)	1	2	3	4	5	(Lots)

2. Did you find GNS3 easy to learn?

(Very difficult)	1	2	3	4	5	(Very easy)

3. Did you find GNS3 easy to use?

(Very difficult)	1	2	3	4	5	(Very easy)

4. Were running experiments on GNS3 less time consuming in comparison to physical equipment?

(Much more time consuming)	1	2	3	4	5	(Much less time consuming)

5. Did you learn faster using GNS3 in comparison to using physical equipment?

(Much slower)	1	2	3	4	5	(Much faster)

6. How well did you learn using GNS3 in comparison to using physical equipment, for
   a) basic networking topics (static route/ACL/VLAN)?

(Much worse)	1	2	3	4	5	(Much better)

   b) dynamic routing protocols (RIP/OSPF/BGP)?

(Much worse)	1	2	3	4	5	(Much better)

   c) more advanced topics (OSPF/BGP redistribution)?

(Much worse)	1	2	3	4	5	(Much better)

7. Overall, how well did you learn using GNS3 in comparison to using physical equipment?

(Much worse) 1 2 3 4 5 (Much better)

8. Overall, how well did you learn in using an integrated mixture of GNS3 and physical equipment in comparison to using only physical equipment?

(Much worse) 1 2 3 4 5 (Much better)

The survey generally aimed to measure student prior experience and their perception of the comparative ease of their learning with physical, virtual, and combined networking systems. Question 1 aims to quantify student prior experience. Questions 2 and 3 aim to measure the ease of learning and use of GNS3. Questions 4 to 6 aim to find out various aspects of how GNS3 compared to physical equipment. Question 7 aims to measure the difference in perceived learning between the physical and virtual systems. Whereas Question 8 aims to quantify the value of the integrated physical and virtual learning environment, relative to the original physical only environment.

Table 3 shows the survey results as a tally of question responses (within a scale of 1 to 5), as well as the mean, standard deviation, and median of each question. Also the results of a single sample t-test are provided with the appropriate single-tailed percentage confidence level (1–P). From these results we found that generally:

- The students have some experience in using physical networking equipment (Q1 mean 2.88).
- The students found that GNS3 are slightly more on the easy to learn side of scale (Q2 mean 3.25, significant at >85% confidence level).
- The students found that GNS3 are easy to use (Q3 mean 3.56, significant at >99% confidence level).
- The students found that running experiments on GNS3 is slightly less time consuming (Q4 mean 3.31, significant at >85% confidence level);

- The students found that they learn slightly slower (Q5 mean 2.69, significant at >85% confidence level).
- For specific topics, the students found that they learnt slightly better on GNS3
    - Static route/ACL/VLAN (Q6a mean 3.19, significant at >80% confidence level).
    - RIP/OSPF/BGP (Q6b mean 3.13, significant at >70% confidence level).
    - OSPF/BGP redistribution (Q6c mean 3.31, significant at >85% confidence level).
- Overall the students found that they learnt slightly better on GNS3 (Q7 mean 3.25, significant at >85% confidence level),
- Compared to a learning environment of only physical equipment, students report that they learn better in an environment of integrated mixture of GNS3 and physical equipment (Q8 mean 3.94, significant at >99% confidence level).

The result of the last question (Q8) in particular represents our key finding: Students believe that they learn better in the new environment. In addition, the 2016 examination results showed that students achieved similar marks as in previous years.

4.2 Discussion

Overall, students found GNS3 very user-friendly and easy to use, which is probably facilitated by a number of key features. GNS3 displays the network diagram and allows students to access any device console easily by clicking on the device icons. For larger networks in particular, this feature helps students gain a high level understanding of the network much easier and also allow them to switch back and forth from device to device very easily during configuration.

In general, students reported that GNS3 enabled them to learn and complete their exercises more efficiently. Increases in efficiency are likely due to several factors and simulator features. Firstly, the simulator often allowed the students to focus on learning new materials rather than troubleshooting side issues like cabling. Secondly, since GNS3 is integrated with *Wireshark*, students can capture packets on any links by simply making a few clicks. Whereas capturing packets on physical equipment is usually more complex as PCs are sometimes required to connect to the same multi-access network. A third advantage of GNS3 for efficiency is due to the ease in which students can collect the required information, such as Cisco configuration files, routing tables, and *Wireshark* captures, at the end of a laboratory session for their report write-ups. They can do so via emailing the information to themselves or save it to cloud services. Fourthly, GNS3 also allows students to save their networks as project files, and thus it is very easy for students to go back to any step or redo their exercises at later times if needed.

The simulation environment facilitates flexible remote-learning possibilities. The GNS3 simulators have been setup with Internet access. Online students can thus form groups with on-campus students to work collaboratively by using the remote access and web conferencing application *Teamviewer*. The screen sharing feature of *Teamviewer* enables remote students to see the same screen as the on-campus students. Students have reported positive feedback on this feature.

Overall, utilising the integrated physical and simulation learning environment significantly reduced ongoing staff workloads by simplifying laboratory preparation tasks, enabling group independence, and eliminating the need for repeat laboratory sessions. After the initial time investment involved in redesigning the laboratory exercises to utilise the new OSPF/BGP setup (see Section 3.2), the preparation for laboratory sessions was greatly simplified. The redesigned laboratory exercises are founded on a common backbone that all student groups

are required to connect their networks to, and via which, communicate to one or more pre-configured demo networks. Utilising this setup, preparing for laboratory session merely requires that teaching staff copy GNS3 project files that contain whole pre-configured networks to GNS3 workstations – a somewhat trivial task. The redesigned laboratory setups also enable students to work at their own pace and collect information without relying on other groups to have their networks successfully configured, thus alleviating pressure for teaching staff to maintain group concurrency. Furthermore, prior to using GNS3, repeat laboratory sessions had to be run for each networking subject, which entails frequent laboratory changeovers for each week's learning activity. Switching laboratory sessions back and forth involves cabling and modifications made to the routers and switches, and thus creates extra preparation work for teaching staff. Adding GNS3 simulators increased the laboratory capacity significantly and repeat laboratory sessions could be eliminated, given our student numbers and the additional facilities available.

In summary, GNS3 significantly reduces workloads in laboratory preparations and enables student groups to learn at their own pace and to achieve the same learning outcomes at any location. We have also found that students perceive GNS3 as being intuitive and very easy to learn. Based on our experience, running GNS3 on Ubuntu is very stable and serves the purpose very well. GNS3 works well for fundamental as well as advanced and complicated networking experiments. Given that the technology is mature we recommend implementing GNS3 in any networking laboratories. At the time of this writing, newer versions of GNS3 became available.

5 Conclusion

High quality hands-on practical exercises are essential for universities to produce work-ready graduates in networking. Due to the high cost of networking equipment, it has always been a challenge. This paper presented our effort in designing, building, and evaluating a networking

laboratory using both physical equipment and network simulators to offer practical classes for on-campus and potentially online students concurrently. The network design was centred around the key idea that the networking equipment for each group must be directly connected to a common backbone; and all the laboratory exercises are designed in a way that each group is required to connect to some pre-configured demo networks. The open source network simulator GNS3 provided a low cost solution augmenting the existing hardware in the laboratory. We reported our experience in implementing the GNS3 systems, from infrastructure implementation to laboratory exercise design; and also the learning and teaching experiences of using GNS3 in classes. Based on our experience of using GNS3 in an advanced networking subject for one semester, we conclude that the implemented systems meet our expectations and are able to deliver laboratory exercises effectively for both on-campus and online students. Via an evaluation survey we found that students generally favoured the learning experience offered by the integrated environment. Our next step is to redesign all the existing laboratory exercises for all networking subjects so that they can be delivered on the physical equipment and GNS3 for both on-campus and online students.

References

1. L. Staehr, M. Martin, and K. Chan, A multi-pronged approach to work integrated learning for IT students, J Information Technology Education: Innovations in Practice 13 (2014), 1–11.

2. K. Lim, J. Katupitiya, K. C. Chan, and M. Martin, Design of an IT capstone subject – cloud robotics, Information Technology in Industry 2 (2014), 104–110.

3. C. R. Miles and K. C. Chan, Building an end-to-end ISP broadband infrastructure as an advanced networking subject, Comput Appl Eng Educ J 24 (2016), 16–26.

4. K. C. Chan, A wholesale web callback service, Proceedings of the 8th International Conference on Information Technology and Applications (ICITA 2013), Sydney, Australia.

5. K. C. Chan and D. Tien, A multi-tenant platform for SMS integrated services, International Journal of Computer Networks and Communications 5 (2013), 205–214.

6. K. C. Chan, L. Wong, and D. B. Chan, Design of a large scale community based self-management system for diabetes mellitus, Studies in Health Technology and Informatics 182 (2013), 58–66.

7. K. C. Chan, M. B. Martin, C. Dennis, and M. Boschert, Development of a web-based social networking system for self-management of diabetes mellitus, International Journal of Multimedia and Its Applications 5 (2013), 1–14.

8. M. S. Ayas and I. H. Altas, A virtual laboratory for system simulation and control with undergraduate curriculum, Comput Appl Eng Educ J 24 (2016), 122–130.

9. M. H. Y. Abu Rmilah, M. A. Hassan, and N. A. Bin Mardi, A PC-based simulation platform for a quadcopter system with self-tuning fuzzy PID controllers, Computer Applications in Engineering Education, Comput Appl Eng Educ J 24 (2016), 934–950.

10. S. Amirkhani and A. Nahvi, Design and implementation of an interactive virtual control laboratory using haptic interface for undergraduate engineering students, Comput Appl Eng Educ J 24 (2016), 508–518.

11. M. Domínguez, J. J. Fuertes, M. A. Prada, S. Alonso, and A. Morán, Remote laboratory of a quadruple tank process for learning in control engineering using different industrial controllers, Comput Appl Eng Educ J 22 (2014), 375–386.

12. C. Martin-Villalba, A. Urquia, and S. Dormido, Development of an industrial boiler virtual-lab for control education using Modelica, Comput Appl Eng Educ J 21 (2013), 36–45.

13. I. Colak, E. Irmak, E. Kabalci, and F. Issi, Design and implementation of a remote laboratory platform using MATLAB builder for NE, Comput Appl Eng Educ J 22 (2014), 617–629.

14. F. Rodríguez, M. del Mar Castilla, J. A. Sánchez, A. Pawlowski, and J. C. Moreno, Architecture to develop semi-virtual industrial laboratories for the interactive learning of process automation, Comput Appl Eng Educ J 24 (2016), 335–346.

15. N. A. Yalcin, and F. Vatansever, A web-based virtual power electronics laboratory, Comput Appl Eng Educ J 24 (2016), 71–78.

16. E. S. S. Aziz, Y. Chang, S. K. Esche, and C. Chassapis, A multi-user virtual laboratory environment for gear train design, Comput Appl Eng Educ J 22 (2014), 788–802.

17. M. Berenguel, F. Rodríguez, J. C. Moreno, J. L. Guzmán, and R. González, Tools and methodologies for teaching robotics in computer science & engineering studies, Comput Appl Eng Educ J 24 (2016), 202–214.

18. P. W. C. Prasad, A. Alsadoon, A. Beg, and A. Chan, Using simulators for teaching computer organization and architecture, Comput Appl Eng Educ J 24 (2016), 215–224.

19. J. Prieto-Blázquez, J. Arnedo-Moreno, and J. Herrera-Joancomartí, An integrated structure for a virtual networking laboratory, IEEE Transactions on Industrial Electronics 55 (2008), 2334–2342.

20. B. Kneale, A. Y. D. Horta, and I. Box, Velnet: virtual environment for learning networking, Proceedings of the Sixth Australasian Conference on Computing Education, Dunedin, New Zealand, Vol. 30, 2004, pp 161–168.

21. M. Anisetti, V. Bellandi, A. Colombo, M. Cremonini, E. Damiani, F. Frati, J. T. Hounsou, and D. Rebeccani, Learning computer networking on open paravirtual laboratories, IEEE Transactions on Education 50 (2007), 302–311.

22. C. Border, The development and deployment of a multi-user, remote access virtualization system for networking, security, and system administration classes, Proceedings of the 38th SIGCSE Technical Symposium on Computer Science Education, Covington, Kentucky, USA, 2007, pp 576–580.

23. J. Gerdes and S. Tilley, A conceptual overview of the virtual networking laboratory, Proceedings of the 8th ACM SIGITE Conference on Information Technology Education, 2007, pp 75–82.

24. K. E. Stewart, J. W. Humphries, and T. R. Andel, Developing a virtualization platform for courses in networking, systems administration and cyber security education, Proceedings of the 2009 Spring Simulation Multiconference, 2009, Article no. 65.

25. M. Stockman, J. Nyland, and W. Weed, Centrally-stored and delivered virtual machines in the networking/system administration lab, ACM SIGITE Newsletter 2 (2005), 4–6.

26. S. V. Tagliacane, P. W. C. Prasad, G. Zajko, A. Elchouemi, and A. K. Singh, Network simulations and future technologies in teaching networking courses: Development of a laboratory model with Cisco Virtual Internet Routing Lab (Virl), Proceedings of the International Conference on Wireless Communications, Signal Processing and Networking (WiSPNET), IEEE, Mar 2016, pp 644–649.

27. A. Ciuffoletti, Teaching networks in the cloud, Proceedings of the 2016 IEEE Symposium on Service-Oriented System Engineering (SOSE), Mar 2016, pp 340–345.

28. R. I. Dinita, G. Wilson, A. Winckles, M. Cirstea, and A. Jones, A cloud-based virtual computing laboratory for teaching computer networks, Proceedings of the 13th International Conference on Optimization of Electrical and Electronic Equipment (OPTIM), IEEE, May 2012, pp 1314–1318.

29. A. Konak and M. R. Bartolacci, Using a virtual computing laboratory to foster collaborative learning for information security and information technology education, Journal of Cybersecurity Education, Research & Practice 1 (2016). http://digitalcommons.kennesaw.edu/jcerp/vol2016/iss1/2. Accessed 29 Aug 2016.

30. L. Xu, D. Huang, and W. T. Tsai, Cloud-based virtual laboratory for network security education, IEEE Transactions on Education, 57 (2014), 145–150.

31. N. Jovanović, A. Zakić, and M. Veinović, VirtualMeshLab: Virtual laboratory for teaching Wireless Mesh Network, Comput Appl Eng Educ J 24 (2016), 567–576.

32. J. García and J. Entrialgo, Using computer virtualization and software tools to implement a low cost laboratory for the teaching of storage area networks, Comput Appl Eng Educ J 23 (2015), 715–723.

33. E. Mekic, I. Djokic, S. Zejnelagic, and A. Matovic, Constructive approach in teaching of VoIP in line with good laboratory and manufacturing practice, Comput Appl Eng Educ J 24 (2016), 277–287.

34. K. C. Chan and M. Martin, An integrated virtual and physical network infrastructure for a networking laboratory, Proceedings of the Seventh International Conference on Computer Science and Education, Melbourne, Australia, 2012, pp 1433–1436.

35. Brocade: Brocade Virtual Router, Brocade Communications Systems, Inc. http://www.brocade.com/en/products-services/software-networking/network-functions-virtualization/vrouter.html. Accessed 29 Aug 2016.

36. VyOS: Linux-Based Network Operating System, http://wiki.vyos.net/wiki/Main_Page. Accessed 29 Aug 2016.

37. VMware: VMware vSphere Hypervisor (ESXi), VMware Inc. https://my.vmware.com/web/vmware/info?slug=datacenter_cloud_infrastructure/vmware_vsphere_hypervisor_esxi/6_0. Accessed 29 Aug 2016.

38. QNAP: High-Performance 4-Bay NAS Server for SMBs, QNAP Systems, Inc. https://www.qnap.com/en-au/product/model.php?II=40. Accessed 29 Aug 2016.

39. GNS3: Open Source Network Simulator, GNS3 Technologies Inc. https://www.gns3.com/. Accessed 29 Aug 2016.

40. Ubuntu: Open Source Linux Platform, Canonical Ltd. http://www.ubuntu.com/download/desktop. Accessed 29 Aug 2016.

41. pfSense: Open Source Security, pfSense. https://www.pfsense.org/. Accessed 29 Aug 2016.

42. TeamViewer: Remote Support, Remote Access, and Online Meeting Software, TeamViewer GmbH. https://www.teamviewer.com/en/. Accessed 29 Aug 2016.

43. WireShark: WIRESHARK Packet Analyser, Wireshark Foundation. https://www.wireshark.org. Accessed 29 Aug 2016.

A NETWORKING LABORATORY USING AN INTEGRATED MIXTURE OF PHYSICAL EQUIPMENT AND SIMULATORS

Ka Ching Chan and Sean Haythorne

Department of Computer Science and Information Technology

La Trobe University

PO Box 199, Bendigo 3552, Victoria

Email: ka.chan@latrobe.edu.au, s.haythorne@latrobe.edu.au

Table 1. Interface IP addresses of the original laboratory setup

Network	**Group 1 AS101**	**Group 2 AS102**	**Group 3 AS103**	**Group 4 AS104**
PRn, F0/0, BGP Peer 1	192.168.100.1/30	192.168.100.2/30	192.168.100.9/30	192.168.100.10/30
PRn, F0/1, BGP Peer 2	192.168.100.14/30	192.168.100.5/30	192.168.100.6/30	192.168.100.13/30
PRn, F0/3/0, VLAN 1	192.168.**1**.1/25	192.168.**2**.1/25	192.168.**3**.1/25	192.168.**4**.1/25
PRn, F0/3/0, VLAN 2	192.168.**1**.129/25	192.168.**2**.129/25	192.168.**3**.129/25	192.168.**4**.129/25
PRn, F0/3/1, OSPF Area 0	10.10.**1**.2/26	10.10.**2**.2/26	10.10.**3**.2/26	10.10.**4**.2/26

SRn, E1/0, OSPF Area 0	10.10.**1**.1/26	10.10.**2**.1/26	10.10.**3**.1/26	10.10.**4**.1/26
SRn, E1/1, OSPF Area 1	10.10.**1**.65/26	10.10.**2**.65/26	10.10.**3**.65/26	10.10.**4**.65/26
SRn, E1/2, OSPF Area 1	10.10.**1**.129/26	10.10.**2**.129/26	10.10.**3**.129/26	10.10.**4**.129/26
SRn, E1/3, OSPF Area 1	10.10.**1**.193/26	10.10.**2**.193/26	10.10.**3**.193/26	10.10.**4**.193/26

44.

Table 2. Interface IP addresses of the redesigned laboratory setup (**n** = group number)

Network	**Group n AS10n**	**BGP Neighbour (Common to all groups)**
PRn, F0/0, BGP Peer 1	192.168.100.**n**/24	192.168.100.254/24, AS201
PRn, F0/1, BGP Peer 2	192.168.101.**n** /24	192.168.101.254/24, AS203
PRn, F0/3/0, VLAN 1	192.168.**n**.1/25	n/a
PRn, F0/3/0, VLAN 2	192.168.**n**.129/25	n/a
PRn, F0/3/1, OSPF Area 0	10.10.**n**.2/26	n/a
SRn, E1/0, OSPF Area 0	10.10.**n**.1/26	n/a
SRn, E1/1, OSPF Area 1	10.10.**n**.65/26	n/a
SRn, E1/2, OSPF Area 1	10.10.**n**.129/26	n/a
SRn, E1/3, OSPF Area 1	10.10.**n**.193/26	n/a

Table 3. Survey questions and results

Question	**Frequency of Response 1 to 5**	**Mean**	**Standard Deviation**	**Median**	**t-test Value**	**Confidence Level**
1	3, 1, 7, 5, 0	2.88	1.088	3	-0.460	67%
2	0, 3, 7, 5, 1	3.25	0.856	3	1.168	86%
3	0, 0, 7, 9, 0	3.56	0.512	4	4.392	> 99%
4	1, 2, 6, 5, 2	3.31	1.078	3	1.159	86%
5	1, 6, 7, 1, 1	2.69	0.946	3	-1.321	89%
6a	0, 2, 10, 3, 1	3.19	0.750	3	1.000	83%

6b	0, 3, 9, 3, 1	3.13	0.806	3	0.620	72%
6c	0, 4, 4, 7, 1	3.31	0.946	4	1.321	89%
7	0, 4, 5, 6, 1	3.25	0.931	3	1.074	85%
8	0, 0, 4, 9, 3	3.94	0.680	4	5.514	> 99%

45.

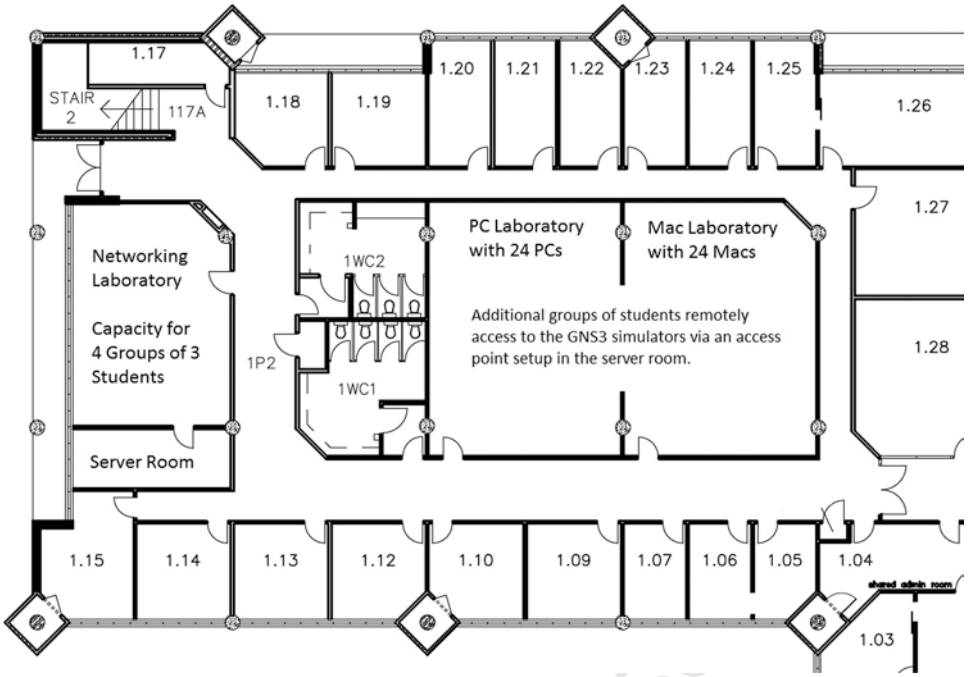

Figure 1

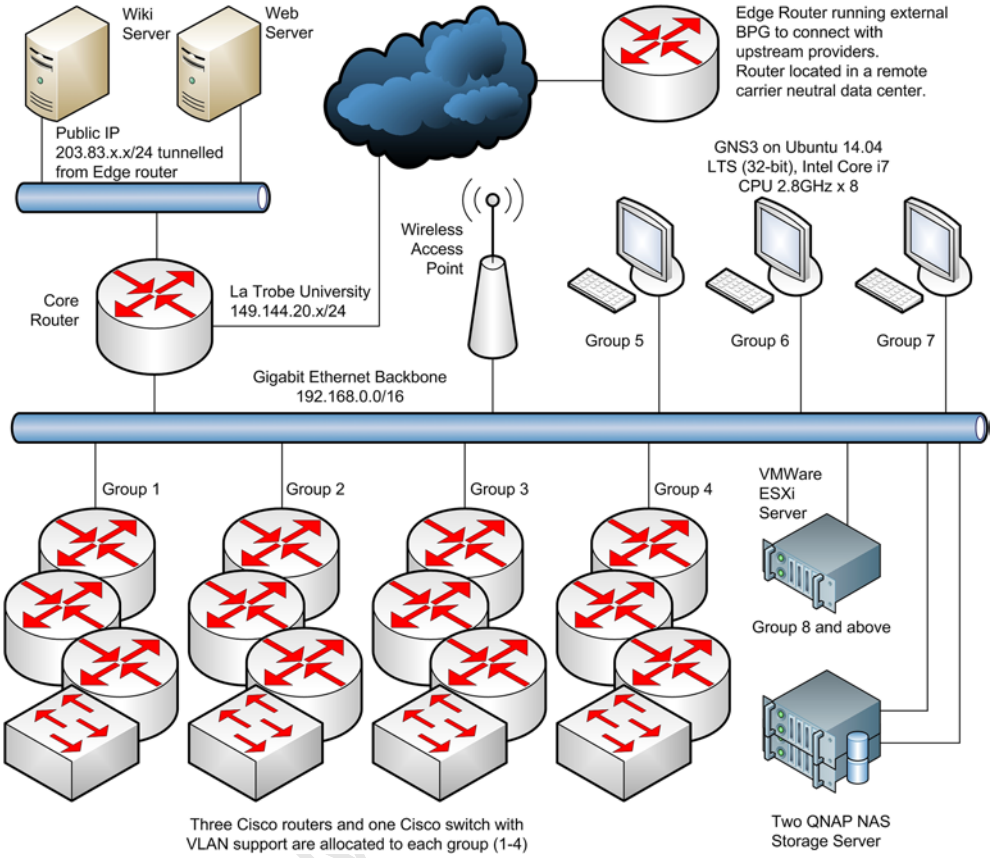

Figure 2

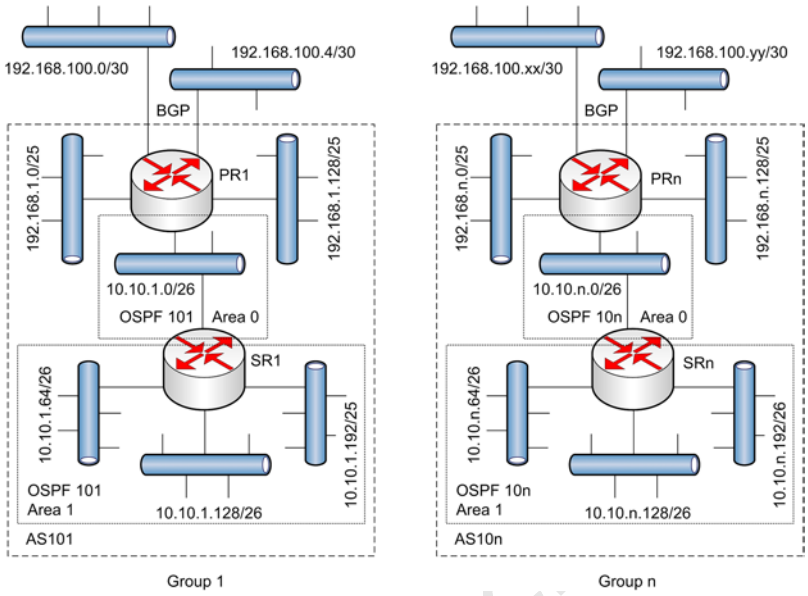

Figure 3

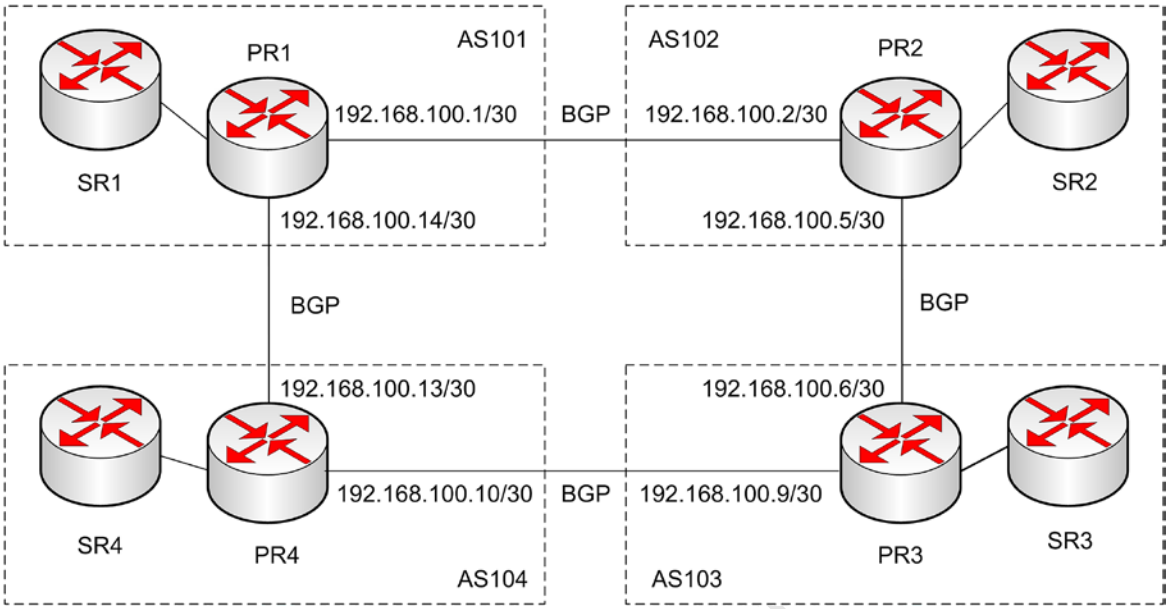

Figure 4

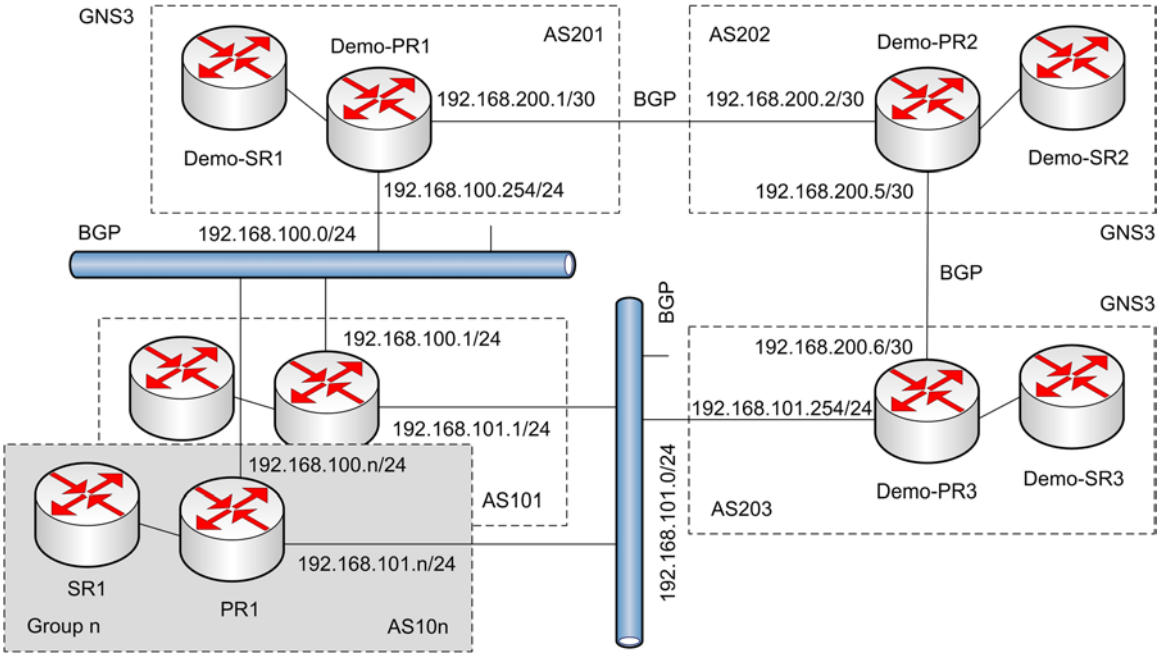

Figure 5

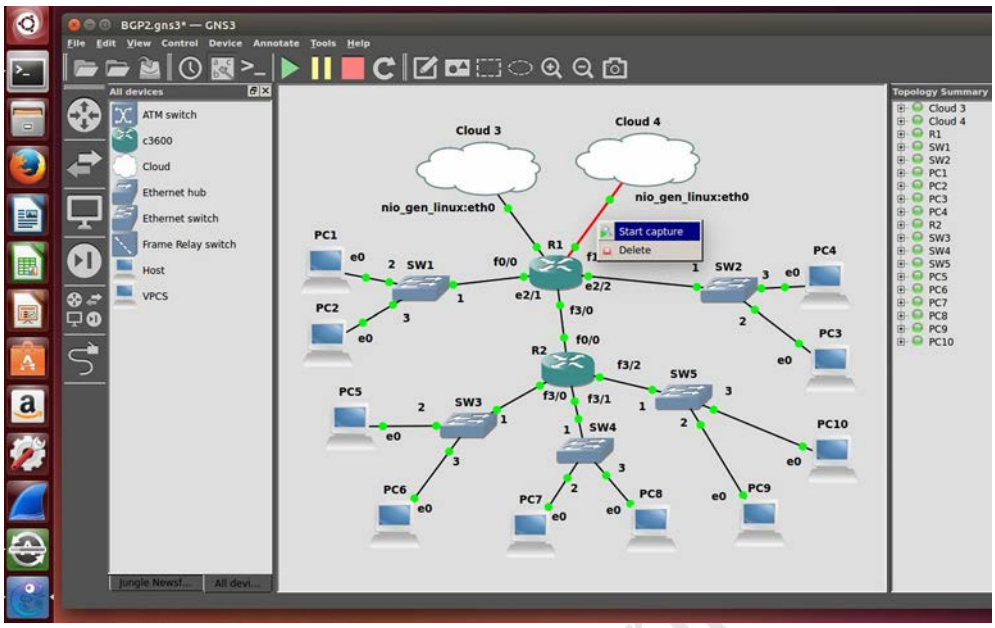

Figure 6

Author/s:
Chan, KC;Haythorne, S

Title:
A networking laboratory using an integrated mixture of physical equipment and simulators

Date:
2017-09

Citation:
Chan, K. C. & Haythorne, S. (2017). A networking laboratory using an integrated mixture of physical equipment and simulators. Computer Applications in Engineering Education, 25 (5), pp.681-692. https://doi.org/10.1002/cae.21829.