Improving waveform quality in direct power control of DFIG using fuzzy controller

Z. Boroujeni, H.; F. Othman, M.; Shirdel, Amir; Rahmani, R.; Movahedi, P.; S. Toosi, E.

Published in:
Neural Computing and Applications

DOI:
10.1007/s00521-014-1725-7

Published: 01/01/2014

Neural Comput & Applic
DOI 10.1007/s00521-014-1725-7

ORIGINAL ARTICLE

Improving waveform quality in direct power control of DFIG using fuzzy controller

H. Z. Boroujeni · M. F. Othman · A. H. Shirdel · R. Rahmani · P. Movahedi · E. S. Toosi

Received: 17 March 2014 / Accepted: 14 September 2014

Abstract This paper proposes a new direct power control (DPC) strategy of double-fed induction generator using fuzzy logic controller. The active and reactive power equations are expanded, and effects of voltage vectors on active and reactive power variations are investigated quantitatively. The selection of the voltage vectors is performed using fuzzy system which is used instead of optimal switching table. Four variables are used as inputs of the fuzzy system which are errors of active and reactive powers, real time value of the rotor speed and stator flux position. The defuzzified output is the optimal selected voltage vector. MATLAB/Simulink software is used for the purpose of simulation and the results reported show the effectiveness of the proposed method in improving the waveform quality. Compared with the conventional DPC, the proposed fuzzy technique can reduce the power out of band percentage by about 25 % which is very impressive.

Keywords Direct power control · Double-fed induction generator · Power quality · Fuzzy logic control

H. Z. Boroujeni
Department of Mechatronic and Automatic Control, Faculty of Electrical Engineering, Universiti Teknologi Malaysia, 81310 Johor, Malaysia

M. F. Othman · R. Rahmani (✉)
Centre for Artificial Intelligence and Robotics, Universiti Teknologi Malaysia, Jalan Semarak, 54100 Kuala Lumpur, Malaysia
e-mail: r.r.rahmani@ieee.org

M. F. Othman
e-mail: fauzi@fke.utm.my

A. H. Shirdel
Department of Chemical Engineering, Åbo Akademi University, 20500 Turku, Finland

P. Movahedi
Department of Information Technology, University of Turku, 20014 Turku, Finland

E. S. Toosi
Faculty of Basic Science, Islamic Azad University, Neka Branch, Neka, Iran

1 Introduction

The negative effects of conventional energies on the environment, such as establishing greenhouse gases, have led researchers to focus on clean energies like renewable ones. Among these energies, wind energy is an important one due to its predictability, independence, velocity and being clean energy [1]. In recent years, many wind farms have been located onshore and offshore to generate electricity energy. In most of the wind farms, wind turbines based on double-fed induction generator (DFIG) are commonly used. Some of the most important advantages of wind turbines based on DFIG, which have variable speed, are four-quadrant power capabilities, reduced electrical power fluctuation, lower converter cost and lower power losses [2–6]. A schematic for connection of DFIG to the power grid is shown in Fig. 1.

Direct torque control (DTC) was initially proposed for induction motors in 1986 [7]. The basis of this method is to separately control the electromagnetic torque and stator flux. Compared to field-oriented control method (FOC), DTC possesses many advantages such as less parameter dependency and fast torque response. In DTC method, stator voltage vectors are selected according to torque and flux errors with their corresponding references. In this scheme with variable switching frequency, voltage vectors

Published online: 28 November 2014

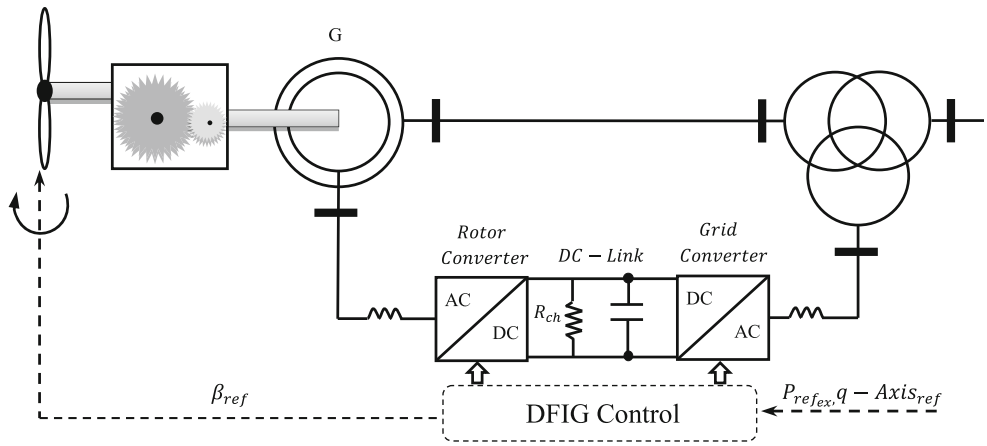

Fig. 1 A schematic for connection of DFIG to the power grid

are chosen from an off-line switching table. In the schemes with fixed switching frequency, which is known as DTC–SVM method, voltage vectors are directly produced [8, 9].

Vector control of DFIGs is still a popular control method due to its performance under balanced and unbalanced situations and also in the presence of voltage sags. However, its complicated structure is one of the disadvantages of this method [10–15]. Based on DTC strategy, direct power control (DPC) of DFIG was proposed in [16–19]. In [16], DPC of DFIG is based on active and reactive power errors with their corresponding references. Voltage vectors in this method are selected from a switching table on the basis of active and reactive power errors with references and position of estimated stator flux. DPC strategy based on SVM method has been applied for controlling DFIG in [17, 18]. In [19], a DPC strategy has been proposed based on discrete space vector modulation. The most important contribution of the paper was in reducing high active and reactive power ripple which had been presented in [16].

Matrix converters (MCs), as AC–AC converters, have emerged as an attractive alternative to the conventional converters [20–22]. These converters produce higher number of voltage space vectors in comparison with conventional VSIs. However, having a high number of voltage space vectors brings the problem of complexity to the control system which is a disadvantage [23, 24]. In [25], the authors proposed a DPC–SVM method to control an induction generator. However, due to the use of SVM method, this presented scheme has a complicated structure and is not implemented on a DFIG.

Fuzzy logic controller (FLC) has been widely used as a robust and efficient controller in many applications of power system control [26–29]. In particular, the use of fuzzy controller in the power control of DFIG wind turbines is investigated. Some researchers have used the hybrid of fuzzy with other methods, in order to power control DFIG. Although the results are good, the complexity of the methods applied degrade the effectiveness of their proposed controllers [30–33]. For example, [31] used FLC and SVM techniques in their proposed controller. The results presented show considerable improvements in the waveform quality; nevertheless, a simpler method may do better in terms of simplicity. In references [34, 35], FLC is used as the controller of DFIG; the issue to be addressed is incorporating flywheel energy storage in their works. Flywheel energy storage is a mechanical instrument which helps to keep the voltage of the DC bus constant. Using such instruments increases the mechanical mass and energy loss of the system which is a demerit for a control system. Proposing a fuzzy controller with the advantages of simplicity and effectiveness are the main contributions of the present work. This paper proposes a new DPC strategy of DFIG using fuzzy system. The quality of the waveform is improved compared to the conventional DPC strategy.

2 DFIG mathematical model

In this section, stator active and reactive power equations are extracted from rotor reference frame. The stator and rotor voltage equations can be written as follows:

$$V_s^{\,r} = R_s I_s^r + \frac{d\phi_s^r}{dt} + j\omega_r \phi_s^r \tag{1}$$

$$V_r^{\,r} = R_r I_r^r + \frac{d\phi_r^r}{dt} \tag{2}$$

where V_s, V_r, R_s, R_r, ϕ_s and ϕ_r are the stator and rotor voltages, stator and rotor resistances and stator and rotor fluxes, respectively. The stator and rotor fluxes equations are as follows:

$$\phi_s^r = L_s I_s^r + L_m I_r^r \tag{3}$$

$$\phi_r^r = L_r I_r^r + L_m I_s^r \tag{4}$$

where L_s, L_r and L_m are stator, rotor and mutual inductances, respectively.

Referring to [16], the stator active and reactive power inputs from the grid are written as follows:

$$P_s = -\frac{3}{2}\frac{L_m}{\sigma L_s L_r}\omega_1 |\phi_s^r||\phi_r^r| \sin\theta \tag{5}$$

$$Q_s = \frac{3}{2}\frac{\omega_1}{\sigma L_s}|\phi_s^r|\left(\frac{L_m}{L_r}|\phi_r^r|\cos\theta - |\phi_s^r|\right) \tag{6}$$

where σ is the leakage factor and is equal to $(L_s L_r - L_m^2)/L_s L_r$. θ is the phase angle between stator and rotor flux and assuming constant stator voltage leads to constant stator flux. By differentiating (5) and (6), the results are shown in the following equations

$$\frac{dP_s}{dt} = -k_t\omega_1|\phi_s^r|\frac{d(|\phi_r^r|\sin\theta)}{dt} \tag{7}$$

$$\frac{dQ_s}{dt} = k_t\omega_1|\phi_s^r|\frac{d(|\phi_r^r|\cos\theta)}{dt} \tag{8}$$

where $k = 3L_m/(2\sigma L_s L_r)$.

As can be seen in (7) and (8), intensive variations of active and reactive power can be concluded by variations of $|\phi_r^r|\sin\theta$ and $|\phi_r^r|\cos\theta$, respectively. The $|\phi_r^r|\sin\theta$ and $|\phi_r^r|\cos\theta$ are the perpendicular and radial components of rotor flux (ϕ_r^r). Thus, if the change of the rotor flux is at the direction of the stator flux, reactive power will change. On the other hand, if the change of the rotor flux is perpendicular to the stator flux, active power will change. Therefore, in an accurate investigation on active and reactive power changes, changes of rotor flux in rotor frame should be known. Thus, by knowing the position of the stator flux in rotor reference, frame allows us to investigate the voltage vectors effect on the rotor flux and also on active and reactive power changes.

From (2) and neglecting rotor resistance, it is obtained that

$$\frac{d|\phi_r^r|}{dt} = V_r^r - R_r i_r^r \approx V_r^r \tag{9}$$

And then

$$\Delta\phi_r^r = V_r^r \cdot \Delta t \tag{10}$$

Thus, rotor flux variation is dependent on applied voltage vectors in the rotor side converter. Rotor flux variation can be decomposed in two radial ($V_{rr} \cdot \Delta t$) and tangential ($V_{rt} \cdot \Delta t$) components as illustrated in Fig. 2.

Considering $V_{r\alpha_r}$ and $V_{r\beta_r}$ as applied voltage vector components to the rotor side converter, the radial voltage component can be written as follows:

$$V_{rr} = V_{r\alpha_r} \cdot \cos\theta_r + V_{r\beta_r} \cdot \sin\theta_r \tag{11}$$

Similarly, tangential voltage component is obtained as follows:

$$V_{rt} = V_{r\beta_r} \cdot \cos\theta_r - V_{r\alpha_r} \cdot \sin\theta_r \tag{12}$$

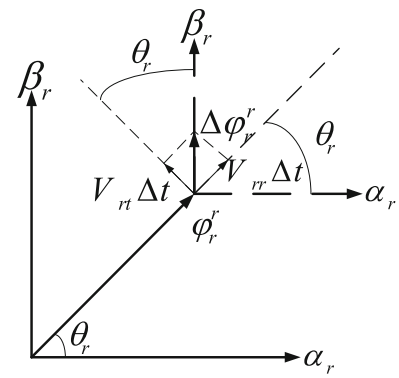

Fig. 2 Tangential and radial components of rotor flux variation

3 Principles of Direct Power Control

The principle of DPC for DFIG is explained extensively in [16]. As it is depicted in Fig. 3, three-phase stator voltages and currents are measured and transformed into stationary reference frame. Then, active and reactive powers are estimated using equations (13) and (14). From equation (15), stator flux angle is calculated and transformed into rotor frame. The calculated active and reactive powers are compared with their corresponding references in the next step. Then, the errors are sent to two three-level hysteresis comparators. Using the outputs of hysteresis comparators and also the sector number which stator flux in rotor reference frame lies in, a proper voltage vector is selected from the switching table (Table 1), as proposed in [16]. This switching table has been presented according to the analysis presented in the previous section.

$$P_s = \frac{3}{2}(V_{s\alpha}I_{s\alpha} + V_{s\beta}I_{s\beta}) \tag{13}$$

$$Q_s = \frac{3}{2}(V_{s\beta}I_{s\alpha} + V_{s\alpha}I_{s\beta}) \tag{14}$$

$$\phi_s = \int_0^t (V_s - R_s I_s)dt, \quad \angle\phi_s = \tan g^{-1}\left(\frac{\phi_\beta}{\phi_{alpha}}\right) \tag{15}$$

4 Fuzzy logic controller

A block diagram of implementing FLC in controlling DFIG is shown in Fig. 4. The fuzzy inference system is used instead of hysteresis blocks and optimal switching table. The fuzzy controller is to generate the proper voltage vector to be fed to VSI. Four sets of real-time inputs are considered for the proposed fuzzy system which are stator flux (ϕ_s), active and reactive power errors ($\Delta P \& \Delta Q$), and the rotor speed (ω_r). Figure 5 shows the seven membership functions chosen for the stator flux (ϕ_s) which cover a range of −50 to 350 Wb. The same fuzzy sets are considered for active and reactive power errors with four membership functions of

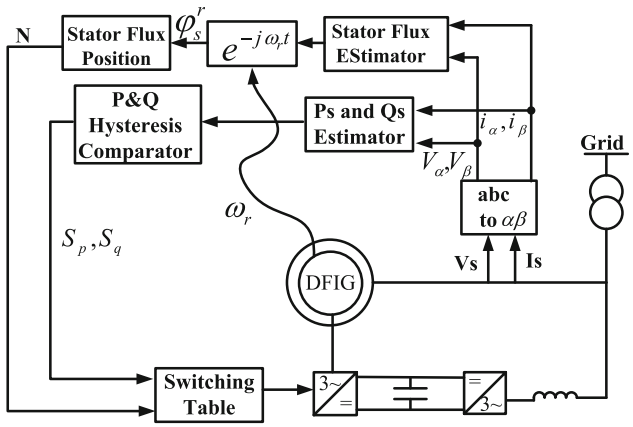

Fig. 3 Schematic diagram of classical DPC of DFIG

Table 1 Optimal switching table in classical DPC

		I	II	III	IV	V	VI
$Sq = 1$	$S_p = 1$	101	100	110	010	011	001
	$S_p = 0$	100	110	010	011	001	101
	$S_p = -1$	110	010	011	001	101	100
$Sq = 0$	$S_p = 1$	001	101	100	110	010	011
	$S_p = 0$	111/000	111/000	111/000	111/000	111/000	111/000
	$S_p = -1$	010	011	001	101	100	110
$Sq = -1$	$S_p = 1$	001	101	100	110	010	011
	$S_p = 0$	011	001	101	100	110	010
	$S_p = -1$	010	011	001	101	100	110

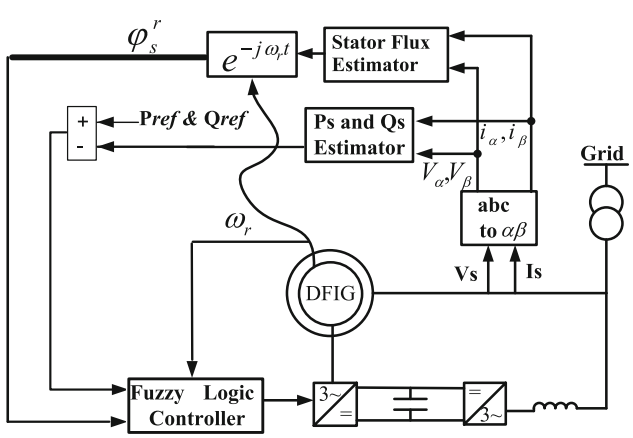

Fig. 4 Schematic diagram of the proposed Fuzzy-DPC for DFIG

negative big (NB), negative small (NS), positive small (PS) and positive big (PB) (see Fig. 6). The last input is rotor speed variation ($\Delta\omega_r$) due to its huge impact on the system performance. As Fig. 7 shows, two membership functions are chosen for this input which are negative (N) and positive (P) which represent the sub-synchronous and super-synchronous conditions, respectively.

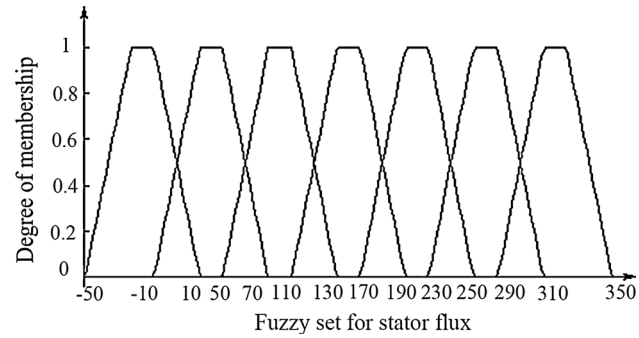

Fig. 5 The fuzzy set for stator flux

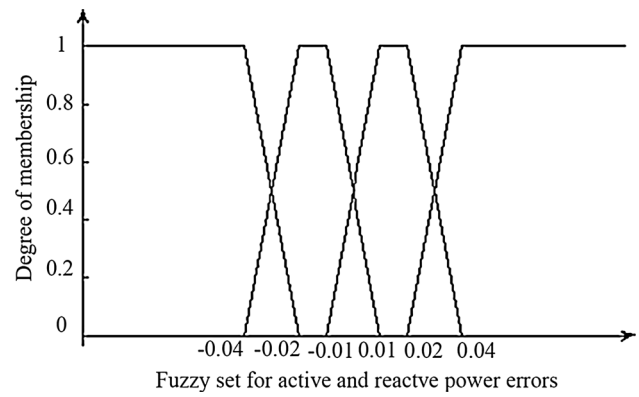

Fig. 6 The fuzzy set for active and reactive power errors

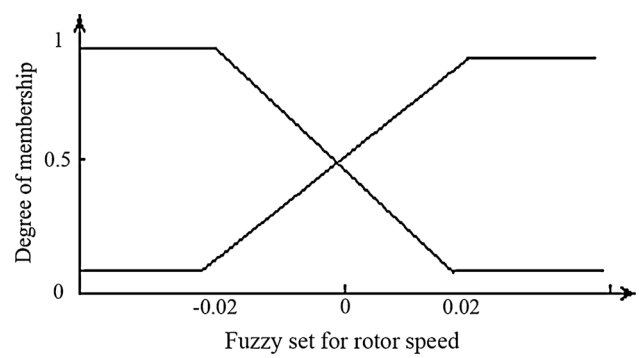

Fig. 7 The fuzzy set for variation of rotor speed

The output generated is a single tone value which is normalized to return value representing as the voltage vector. A sample from the rule table written for the fuzzy inference system is as follows:

if ϕ_s is in M_5 & ΔP is in PB & ΔQ is in NB & ω_r is in N; then V_n is 110.

The proposed fuzzy controller works based on Mamdani's min–max rule [36, 37]. The firing strength for the ith rule is shown in the following equation:

$$f_i = \min\{\mu_\phi(\phi), \mu_P(\Delta P), \mu_Q(\Delta Q), \mu_{\omega_r}(\omega_r)\} \quad (16)$$

where μ represents the membership degree for each input and has a value between 0 and 1. The firing strength must be compared with the output of the rule, and the minimum value will be chosen as the membership value of the rule. The membership value for the ith ruke is as follows:

$$D_i = \min\{\mu_{V_i}, f_i\} \quad (17)$$

Among the membership values for all the rules, the rule with the maximum membership value is chosen as the output. This ensures that the chosen output has maximum possibility of distribution. The degree of membership for the output is obtained from the following equation:

$$\mu_V = \max\{D_i\};\ i = 1, 2, 3, \ldots \quad (18)$$

This value is used in the defuzzification of the output to generate the proper voltage vector to be exerted by VSI.

5 Simulation Results

The configuration of the DFIG-based generation system is illustrated in Fig. 8, and the parameters of the simulated 2 *MW* DFIG is given in Table 2. The simulation is performed using MATLAB/Simulink software. The main objective of the AC filter which is connected to the stator is to absorb the switching harmonics and improve the quality of the waveform.

The results are investigated starting at 0.8 s where the stator is fully energized and the converter is enabled. The initial power references for the stator are −1.5 MW and −0.8 MVar, respectively.

Simulation results are shown in Fig. 9 for rotor speed changing from sub-synchronous to super-synchronous speed which is from 0.8 to 1.2 p.u.. Active power changes from −1.5 to −0.5 MW throughout the simulation, while reactive power experiences variation from −0.8 to +0.66 MVar. The effectiveness of the proposed strategy is shown in the Figure by presenting 0.7 s of the simulation run. From these simulation results, it can be obviously recognized that active and reactive powers follow their reference values very well. The simulation has been carried out with the rotor speed variation during the period of 0.95 to 1.1 s, where the speed varies from 0.8 to 1.2 (p.u.). As can be concluded from this Figure, active and reactive powers track their references precisely and the system responsibility is robust to speed variation.

To show the effectiveness of the proposed fuzzy control, a comparison study is performed between conventional DPC and the proposed fuzzy method. The comparative results based on the active and reactive power errors are presented in Table 3. The data are taken for a duration of 15 ms, and the parameters are $\Delta P = \int |P - P_{ref}| dt$ and $\Delta Q = \int |Q - Q_{ref}| dt$. The comparative table shows that the proposed fuzzy technique can reduce the power out of band percentage to less than a half which is very impressive.

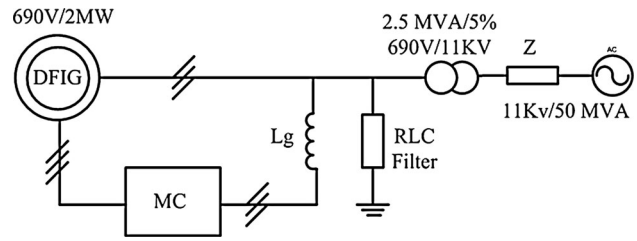

Fig. 8 Schematic diagram of simulated system

Table 2 Parameters of the simulated DFIG

Parameter	Value
Stator voltage	690 V
Rated power	2 MW
Turn ratio	0.3
R_r (referred to stator)	0.0121 p.u
R_s	0.0108 p.u
$L_{\sigma r}$ (referred to stator)	0.11 p.u
$L_{\sigma s}$	0.102 p.u
L_m	3.362 p.u
Number of pole pairs	2
Lumped inertia constant	0.2 s

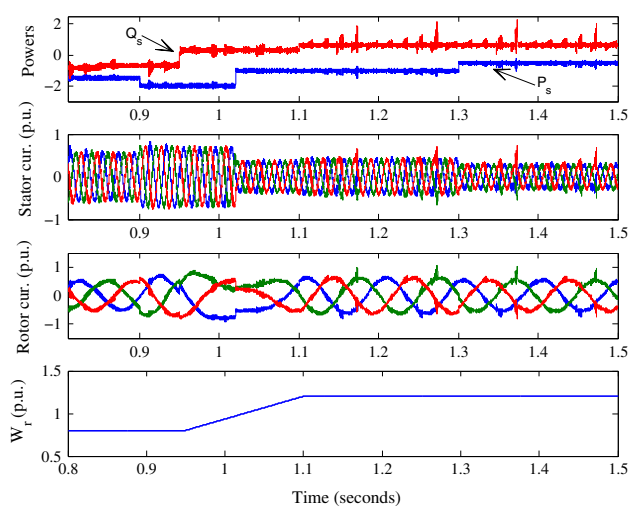

Fig. 9 Simulation results under various stator and rotor condition: **a** Stator active (MW) and reactive (MVar) powers; **b** Stator current (p.u.); **c** Rotor current (p.u.); **d** rotor speed (p.u.)

Table 3 Comparative results based on the active and reactive power errors

Parameters	Conventional DPC	Proposed Fuzzy controller	Improvement (%)
ΔP (p.u.)	0.01928	0.006890	64.26
ΔQ (p.u.)	0.01971	0.008812	55.30
Percentage of Out of band for P (%)	37.89	14.51	61.47
Percentage of Out of band for Q (%)	42.16	16.90	59.91

6 Conclusion

In this paper, a new DPC scheme for DFIG has been presented. The conventional voltage source inverter (VSI) has been developed by using FLC instead of hysteresis switches. Simulation results confirmed that active and reactive powers track their own reference values very well. It should be noted that active and reactive power equations have been extended to discrete time equations, and the effects of voltage vectors on active and reactive power equations have been investigated quantitatively. It should be noted that this issue has not been investigated in recent literature. The selection of the voltage vectors is performed using fuzzy system which is used instead of optimal switching table. Four variables are used as inputs of the fuzzy system which are errors of active and reactive powers, real-time value of the rotor speed and stator flux position. The defuzzified output is the optimal selected voltage vector. MATLAB/Simulink software is used for the purpose of simulation, and the results reported show the effectiveness of the proposed method in improving the waveform quality. Compared with the conventional DPC, the proposed fuzzy technique can reduce the power out of band percentage by about 25 % which is very impressive.

Acknowledgments This work is supported by Ministry of Education Malaysia, Universiti Teknologi Malaysia (UTM) and Centre for Artificial Intelligence & Robotics (CAIRO), under grant vot number 00G20. The authors also gratefully acknowledge the helpful comments and suggestions of the reviewers, which have improved the presentation.

References

1. Rasoul Rahmani, Rubiyah Yusof, Mohammadmehdi Seyedmahmoudian, Saad Mekhilef (2013) Hybrid technique of ant colony and particle swarm optimization for short term wind energy forecasting. J Wind Eng Ind Aerodyn 123:163–170
2. Heier S (1998) Grid integration of wind energy conversion systems. Wiley, New York
3. Muller S, Deicke M, De Doncker RW (2002) Doubly fed induction generator systems for wind turbines. IEEE Ind Appl Mag 8(3):26–33
4. Pena R, Clare J, Asher G (1996) Doubly fed induction generator using back-to-back pwm converters and its application to variable-speed wind-energy generation. IEE Proc Electr Power Appl 143(3):231–241
5. Shahabi M, Haghifam MR, Mohamadian M, Nabavi-Niaki S (2009) Microgrid dynamic performance improvement using a doubly fed induction wind generator. IEEE Trans Energy Convers 24(1):137–145
6. Rahimi M, Parniani M (2010) Dynamic behavior analysis of doubly-fed induction generator wind turbines-the influence of rotor and speed controller parameters. Int J Electr Power Energy Syst 32(5):464–477
7. Takahashi I, Noguchi T (1986) A new quick-response and high-efficiency control strategy of an induction motor. IEEE Transact Ind Appl 5:820–827
8. Rahman MF, Zhong L, Lim KW (1998) A direct torque-controlled interior permanent magnet synchronous motor drive incorporating field weakening. IEEE Trans Ind Appl 34(6): 1246–1253
9. Habetler TG, Profumo F, Pastorelli M, Tolbert LM (1992) Direct torque control of induction machines using space vector modulation. IEEE Trans Ind Appl 28(5):1045–1053
10. Akagi H, Sato H (2002) Control and performance of a doubly-fed induction machine intended for a flywheel energy storage system. IEEE Trans Power Electron 17(1):109–116
11. Datta R, Ranganathan V (1999) Decoupled control of active and reactive power for a grid-connected doubly-fed wound rotor induction machine without position sensors. In: Industry applications conference, 1999. Thirty-fourth IAS annual meeting. Conference record of the 1999 IEEE, IEEE, vol 4, pp 2623–2630
12. Abad G, Rodriguez MA, Iwanski G, Poza J (2010) Direct power control of doubly-fed-induction-generator-based wind turbines under unbalanced grid voltage. IEEE Trans Power Electron 25(2):442–452
13. Xu L, Cheng W (1995) Torque and reactive power control of a doubly fed induction machine by position sensorless scheme. IEEE Trans Ind Appl 31(3):636–642
14. Morel L, Godfroid H, Mirzaian A, Kauffmann J (1998) Double-fed induction machine: converter optimisation and field oriented control without position sensor. IEE Proc Electr Power Appl 145(4):360–368
15. Datta R, Ranganathan V (2001) Direct power control of grid-connected wound rotor induction machine without rotor position sensors. IEEE Trans Power Electron 16(3):390–399
16. Xu L, Cartwright P (2006) Direct active and reactive power control of dfig for wind energy generation. IEEE Trans Energy Convers 21(3):750–758
17. Zhi D, Xu L (2007) Direct power control of dfig with constant switching frequency and improved transient performance. IEEE Trans Energy Convers 22(1):110–118
18. Abad G, Rodríguez MÁ, Poza J (2008) Two-level vsc based predictive direct torque control of the doubly fed induction machine with reduced torque and flux ripples at low constant switching frequency. IEEE Trans Power Electron 23(3):1050–1061
19. Kazemi Verij M, Sadeghi Yazdankhah A, Madadi Kojabadi H (2010) Direct power control of dfig based on discrete space vector modulation. Renew Energy 35(5):1033–1042
20. Wheeler PW, Rodriguez J, Clare JC, Empringham L, Weinstein A (2002) Matrix converters: a technology review. IEEE Trans Ind Electron 49(2):276–288
21. Wheeler PW, Clare JC, Apap M, Bradley KJ (2008) Harmonic loss due to operation of induction machines from matrix converters. IEEE Trans Ind Electron 55(2):809–816
22. Djahbar A, Mazari B (2010) Performances evaluation of two-motor drive with matrix converter supply and series connection of stator windings. Int Rev Electr Eng 5(4):1504–1520

23. Cárdenas R, Peña R, Tobar G, Clare J, Wheeler P, Asher G (2009) Stability analysis of a wind energy conversion system based on a doubly fed induction generator fed by a matrix converter. IEEE Trans Ind Electron 56(10):4194–4206
24. Zhang S, Tseng KJ, Nguyen T (2009) Modeling of ac-ac matrix converter for wind energy conversion system. In: 4th IEEE conference on industrial electronics and applications, 2009. ICIEA 2009. IEEE, pp 184–191
25. Liu Qh, He Yk, Bian Sj (2004) Study on the no-load cutting-in control of the variable-speed constant-frequency (vscf) wind-power generator. In: Proceedings of the Csee 3, 001
26. Kamal E, Aitouche A, Abbes D (2014) Robust fuzzy scheduler fault tolerant control of wind energy systems subject to sensor and actuator faults. Int J Electr Power Energy Syst 55(0):402–419. http://www.sciencedirect.com/science/article/pii/S0142061513004031, doi:10.1016/j.ijepes.2013.09.021
27. Rahmani R, Mahmodian M, Mekhilef S, Shojaei A (2012) Fuzzy logic controller optimized by particle swarm optimization for dc motor speed control. In: IEEE student conference on research and development (SCOReD), pp 109–113. doi:10.1109/SCOReD.2012.6518621.
28. Rahmani R, Langeroudi N, Yousefi R, Mahdian M, Seyedmahmoudian M (2014) Fuzzy logic controller and cascade inverter for direct torque control of im. Neural Comput Appl, pp 1–10 (2014). doi:10.1007/s00521-014-1561-9
29. Rahmani R, Seyedmahmoudian M, Mekhilef S, Yusof R (2013) Implementation of fuzzy logic maximum power point tracking controller for photovoltaic system. Am J Appl Sci 10(3):209–218
30. Jabr HM, Dongyun Lu, Narayan CKar (2011) Design and implementation of neuro-fuzzy vector control for wind-driven doubly-fed induction generator. IEEE Trans Sustain Energy 2(4):404–413
31. Kazemi MV, Moradi M, Kazemi RV (2012) Minimization of powers ripple of direct power controlled dfig by fuzzy controller and improved discrete space vector modulation. Electr Power Syst Res 89(0):23–30 (2012). http://www.sciencedirect.com/science/article/pii/S0378779612000491, doi:10.1016/j.epsr.2012.02.008
32. Mishra S, Mishra Y, Li F, Dong Z (2009) Ts-fuzzy controlled dfig based wind energy conversion systems. In: IEEE Power Energy Society General Meeting, 2009. PES '09. pp 1–7. doi:10.1109/PES.2009.5275674
33. Belkacem B, Allaoui T, Tadjine M, Safa A (2013) Hybrid fuzzy sliding mode control of a dfig integrated into the network. Int J Power Electron Drive Syst (IJPEDS) 3(4):351–364. http://iaesjournal.com/online/index.php/IJPEDS/article/view/4072
34. Kairous D, Wamkeue R (2012) Dfig-based fuzzy sliding-mode control of wecs with a flywheel energy storage. Electr Power Syst Res 93(0):16–23. http://www.sciencedirect.com/science/article/pii/S0378779612002027, doi:10.1016/j.epsr.2012.07.002
35. Jerbi L, Krichen L, Ouali A (2009) A fuzzy logic supervisor for active and reactive power control of a variable speed wind energy conversion system associated to a flywheel storage system. Electr Power Syst Res 79(6):919–925. http://www.sciencedirect.com/science/article/pii/S0378779608003209, doi:10.1016/j.epsr.2008.12.006
36. Lee CC (1990) Fuzzy logic in control systems: fuzzy logic controller. ii. IEEE Trans Syst Man Cybern 20(2):419–435
37. Castro JL (1995) Fuzzy logic controllers are universal approximators. IEEE Trans Syst Man Cybern 25(4):629–635