This article has been accepted for publication in a future issue of this journal, but has not been fully edited. Content may change prior to final publication. Citation information: DOI 10.1109/TSG.2017.2707345, IEEE Transactions on Smart Grid

Modeling Electronic Power Converters in Smart DC Microgrids - An Overview

Airán Francés, *Graduate Student Member, IEEE,* Rafael Asensi, Óscar García, *Member, IEEE,* Roberto Prieto, *Member, IEEE,* and Javier Uceda, *Fellow, IEEE,*

***Abstract*—EPCs (Electronic Power Converters) are the key elements of the smart dc microgrid architectures. In order to enhance the controllability of the system, most of the elements are envisioned to be connected to the different buses through EPCs. Therefore, power flow, stability, and dynamic response in the microgrid are function of the behavior of the EPCs and their control loops.**

Besides, dc microgrids constitute a new paradigm in power distribution systems due to the high variability of their operating conditions, owing to the intermittent behavior of the renewable sources and customer energy consumption. Furthermore, in order to deal with this variability, the power converters can modify their operation mode, adding complexity to the dynamic and stability analysis of the system.

This paper gives an overview of the various analytical and blackbox modeling strategies applied to smart dc micro/nanogrids. Different linear and nonlinear modeling techniques are reviewed describing their capabilities, but also their limitations. Finally, differences among blackbox models will be highlighted by means of illustrative examples.

***Index Terms*—Analytical models, DC-DC power converters, Interconnected systems, Microgrids, Nonlinear dynamical systems, Power system modeling, Smart grids, System dynamics, System identification , System performance.**

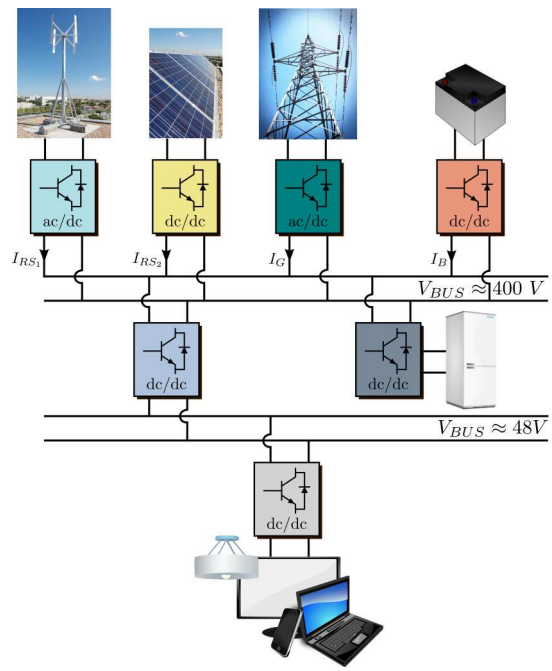

Figure 1: Microgrid architecture scheme.

I. Introduction

MOST dc micro/nanogrid architectures, as the one represented in Fig. 1, consist of renewable power sources (wind, PV, etc.) connected to the HV (High Voltage) dc bus, very often around 400 V. Also local storage units based on batteries can be found connected either to the HV bus or the LV (Low Voltage) bus (48V, 24V, 12V, etc.), in order to account for gaps between power generation and consumption. In addition to that, most of the loads are connected to the LV buses for safety reasons, and exceptionally, as could be the case of white goods, to HV bus [1]–[6]. Finally, an important part of the system is the connection to the grid. In general, microgrids are expected to be able to work either connected to or disconnected (islanded) from to the grid. The advantage of being able to work in islanded mode is to guarantee the power delivery in case of grid failure. A thorough review of power architectures, applications and standardization issues can be found in [7].

As it is depicted in Fig. 1, all the sources, the storage units, and the loads are connected to the different buses through EPCs. Due to the density of these type of units in the grid architecture, some authors have named these structures as *systems of electronic power converters* in order to emphasize the relevance of these elements in the system performance.

The operation of smart micro/nanogrids is usually based on a hierarchical control structure, dealing with the operation in islanded and connected modes, the quality of service, stability, energy market issues, etc. [8]. At the lowest level, the primary control, the operation of several distributed generators in parallel is based on droop controllers, which are explained in detail in [9]. This control strategy adds a virtual resistive impedance, decreasing the output voltage reference of each converter proportionally to its output current. Therefore, the power sharing among the sources connected in parallel will be defined by means of their droop parameter, K (see Fig. 2). Consequently, the bus voltage will depend on the power flow through the bus.

Making use of this situation, DBS (DC Bus Signaling) controllers define a set of different states as a function of the bus voltage level to optimize the behavior of the microgrid. A detailed explanation can be found in [10]. In Fig. 3 it is depicted the typical qualitative static V-I characteristic of the converters that interface the different elements of the microgrid represented in Fig. 1. The converter interfacing the grid with the microgrid will generally work with a droop

This work was supported by the Spanish Ministry of Economy and Competitiveness under the project EVA-ANRI with reference DPI2013-47176-C2-1-R.
The authors are with the Industrial Electronic Center, Technical University of Madrid, Spain, e-mail: airan.frances@upm.es (see http://www.cei.upm.es).

This article has been accepted for publication in a future issue of this journal, but has not been fully edited. Content may change prior to final publication. Citation information: DOI 10.1109/TSG.2017.2707345, IEEE Transactions on Smart Grid

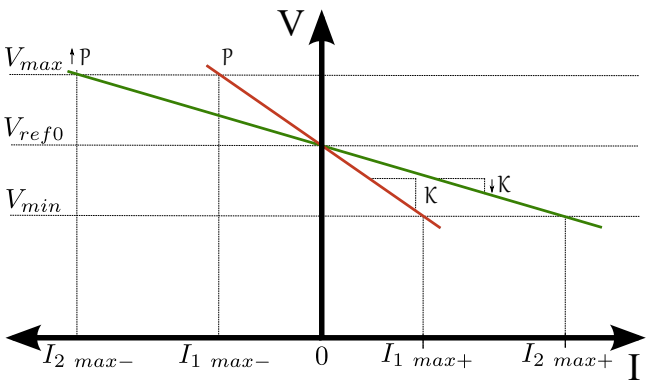

Figure 2: Voltage droop control.

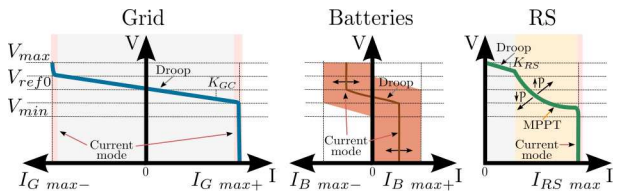

Figure 3: DC Bus Signaling control.

control, supplying or absorbing energy depending on the power state of the system. The change in the control of this converter will be in the droop parameters, in order to modify the power supply distribution among the sources. The converter interfacing the renewable sources will work with a constant power characteristic, absorbing the maximum energy available with a MPPT (Maximum Power Point Tracker) control. However, in case the microgrid is unable to absorb this amount of power, a droop mode is often included. This excess of energy is noticed by an increase in the bus voltage, therefore the droop mode will be activated when this voltage rises above a certain threshold. Finally, the converters connected to batteries can have different control strategies depending on the optimization strategy applied. Additionally, the control of every converter will have a current mode, which will depend on the current rating of the devices.

This is a very popular control strategy for this kind of applications. A reason for that is related to its decentralized approach, which avoids single point of failure and allows plug&play capability. Another key feature of the DBS is the ability of avoiding over voltage in the bus in case the microgrid is not able to absorb all the energy available in the renewable sources. A detailed description of this technique can be found in [11] and a comprehensive review of centralized, decentralized, and distributed control strategies can be found in [12].

Furthermore, this approach can be applied to different hierarchical levels. For instance, the microgrid represented in Fig. 1 can be connected to a higher level microgrid with the same structure. This new microgrid could include renewable sources (e.g. solar parks or wind farms), storage units, and also a connection to an even higher level microgrid. The loads in this case could include public lights and lower level microgrids. This process can go on shaping the entire smart grid. However, the structure and the control strategy within each microgrid could be the same. More details about this hierarchical construction can be found in [8].

In the hierarchical structure, the different microgrids are interconnected by EPCs. This approach is very interesting from the design and modeling point of view. As EPCs provide dynamic independence, the different microgrids can be deeply studied individually. Once the individual microgrids have been analyzed and the necessary actions have been taken to ensure that its dynamic behavior is acceptable under any considered situation, the interconnection of the different microgrids should be likewise well behaved. When the stability and dynamic performance of the microgrid have been ensured, much more simplified models can be used to analyze power flow optimization among the different microgrids, fault tolerance strategies, etc. In this paper the focus is on the models able to reproduce in detail the behavior of any of the microgrids that integrate the system.

If the collection of possible states within the dc microgrids with a DBS controller or equivalent is reviewed, it is easy to conclude the wide variety of operating conditions of the EPCs, such as the direction of the power flow, their behavior as CS (Current Source), VS (Voltage Source) or VS with virtual output impedances implemented through the voltage droop controller, and MPPT.

In summary, if the behavior of the smart dc micro/nanogrid has to be simulated, it is necessary to develop models for the different blocks in the system. If any of these blocks have a very different behavior according to the system state, the models should be able to represent dynamically this changing behavior, and particularly their transitions among the different states. The models should be able to represent the large-signal, nonlinear behavior of the EPCs, as indicated in Fig. 3, for some of the units in steady-state. Additionally, as it was mentioned before, the models should anticipate not only the dynamic performance of EPCs in any of these operating points, but also in the neighborhood of the points where the EPCs change drastically their behavior, such as a converter operating as VS that changes to operate as a CS.

In such complex environment, very often smart dc micro/nanogrids are built using COTS (Commercial Off-The-Shelf) converters. The available information included in the datasheets is very limited adding difficulties to the modeling problem. In those cases, the COTS converters have to be modeled by means of blackbox modeling techniques.

The rest of the paper is structured as follows. A review of averaging techniques is presented in Section II. Besides, several works for system-level analysis based on this technique are discussed. Alternative modeling approaches are shown in Section III, where special attention is paid to modular and nonlinear approaches. Section IV focuses on blackbox modeling techniques, where the inclusion of different types of nonlinearities is discussed. In Section V the various blackbox model structures available in the literature are compared using archetypal examples to highlight the differences among them. Finally, concluding remarks are presented in Section VI.

This article has been accepted for publication in a future issue of this journal, but has not been fully edited. Content may change prior to final publication. Citation information: DOI 10.1109/TSG.2017.2707345, IEEE Transactions on Smart Grid

II. Review of averaging techniques

The switching nature of EPCs makes them nonlinear time-variant systems. Hybrid modeling techniques have been proposed in order to capture this complex behavior. However, in many cases simplified models can represent with enough accuracy the behavior of the system under certain assumptions. The most common simplification is the averaged model, which provides nonlinear time-invariant models. These large-signal averaged models can be used for different purposes as nonlinear stability analysis and simulation of EPCs, taking advantage of the reduction in computational effort. On the other hand, linear system theory provides several relatively simple and very powerful tools for control stage design and stability analysis of EPCs. Consequently, a linearization around a certain operating point is usually performed to the averaged representations in order to obtain a LTI (Linear Time-Invariant) model.

Depending on the time domain (continuous or discrete) and the averaging method, many different large and small-signal modeling techniques have been proposed.

A. State-space averaging

State-Space Averaging (SSA) has been used very successfully in many applications during the last thirty years [13]–[18]. The idea is to describe the state-space equations in each of the switch configurations. Then the average value of the state variables in each switching cycle is obtained by weighting the different modes with the duty cycle. Afterwards, a perturbation/linearization process can be performed to obtain the small-signal model.

If a PWM converter with duty cycles d_i is considered, the average model would look as follows (1):

$$\begin{aligned} \dot{x} &= \sum_{i=1}^{n}[A_i d_i x + B_i d_i u] \\ y &= Cx + Du \end{aligned} \tag{1}$$

where x is the state vector, u is the input vector, y is the output vector, A is the state matrix, B is the input matrix, C is the output matrix and D is the feedthrough matrix.

This model will provide a very good estimation of the dynamic of the EPC if two conditions are complied with. First, the switching frequency should be much higher than the ones of interest and, second, the ripple of the state variables must be small enough. Also, a slow variation of the duty cycle is assumed. However, these conditions are very reasonable because the control stage will attenuate the high frequency signals and, in general, converters are design to present a low enough ripple.

Nevertheless, there are some converters that, by concept, cannot be modeled with this technique. For instance, resonant converters do not comply with the first condition, because their time constants are of the same order as the switching frequency. On the other hand, DAB (Dual Active Bridge) converters controlled using phase-shift modulation do not meet the second condition, since they depend on state variables with zero average value in a switching cycle. DAB can be often found in microgrids designs associated with solid-state transformers [19], [20]. Furthermore, in case a very high switching frequency is used, the side-band effect of close-loop converters becomes significant due to the PWM modulation, limiting the application of SSA.

B. Generalized state-space averaging

In order to model converters that do not comply with the SSA conditions, *generalized state-space averaging* has been used [21], [22]. This method allows the analysis of variables with ac behavior or large ripple content. In this case, the averaging method is based on a time-dependent Fourier series representation for a sliding window. This method is frequency-selective since each element of the series represents the gain of the signal at each harmonic frequency. In fact, if only the dc term of the series is considered, the state-space averaging method is recovered. This method is based on the fact that the waveform $x(t)$ can be approximated with arbitrary precision in the $(t-T, t)$ range by the Fourier series [23], as represented in (2):

$$x(t) = \sum_{k=-n}^{n} \langle x \rangle_k(t) e^{jk\omega t} \tag{2}$$

where ω is the angular frequency, t is time, and $\langle x \rangle_k(t)$ are the complex Fourier coefficients defined in (3):

$$\begin{aligned} w &= \frac{2\pi}{T} \\ \langle x \rangle_k(t) &= \frac{1}{T}\int_{t-\tau}^{t} x(\tau) e^{-jk\omega\tau} d\tau \end{aligned} \tag{3}$$

where T is the period. The selection of the value of T will depend on the application, as switching period in case of PWM converters or fundamental period in general. The subscript k refers to the index-k average, which corresponds to the k-th harmonic. In order to recover the SSA representation only $k = 0$ would be included, whereas $k = \{1, -1\}$ would account for the first harmonic content.

In order to obtain the state-space representation from the average variable from (3) two issues must be addressed related to the index-k average: differentiation with respect to time and computation of the product of two signals. The first issue is solved using Leibniz integral rule, the time derivative of each element of the series would have this form (4):

$$\frac{d}{dt}\langle x \rangle_k(t) = \langle \frac{d}{dt} x \rangle_k(t) - jkw\langle x \rangle_k(t) \tag{4}$$

where the first term of the right-hand side is usually approximated by a DF (see Section III.C), whereas the second issue can be computed using discrete convolution (5):

$$\langle qx \rangle_k(t) = \sum_{i=-\infty}^{\infty} \langle q \rangle_{k-i}(t) \langle x \rangle_i(t) \tag{5}$$

where q is in general any other signal, but in case of converters it usually corresponds to the switching function. Further details about this modeling technique and illustrative examples can be found in [22]. This extended version of the previous method has been used, for example, to study resonant and DAB

This article has been accepted for publication in a future issue of this journal, but has not been fully edited. Content may change prior to final publication. Citation information: DOI 10.1109/TSG.2017.2707345, IEEE Transactions on Smart Grid

converters or to get ripple estimations for state variables [21], [24]–[26]. This method has also been applied to system-level simulation of EPC architectures [23]. It must be considered that the complexity of this model grows considerably as the number of considered harmonics increases.

C. Other averaging methods

Even though the previous are the most extended averaging methods for EPCs, some alternative approaches have been proposed. Another common approach to consider higher order approximations is the *KBM (Krylov-Bogoliubov-Mitropolsky)* method, under the assumption of a small ratio between switching period and time constants of the system. The idea is to consider a geometric framework for the average model by means of a change of variables. Detailed information about this modeling approach can be found in [27]–[29]. More recently the *TIMF (Time-Invariant Multi-Frequency)* modeling technique was proposed based on the quasi-Fourier series representation. With this method it is possible to consider different kinds of carrier signals for PWM dc-dc converters [30]. Finally, the *floquet-based* or *cyclic-averaging* method has also been proposed for rapid analysis and design of high order resonant EPCs, offering a ripple estimation in steady-state [31].

D. Discrete averaged models

In order to achieve more accurate results at high frequencies, higher than half of the switching frequency, analogue discrete methods have been proposed [32], [33]. These models are more complex, but they do not rely on frequency and ripple simplifications, thus they can be used to represent both resonant and DAB converters with phase-shift modulation mentioned before [34], [35]. Besides, when using digital control loops, discrete methods are able to account for sampling, modulation effect and delays [36], and system-level control impact on the stability [37]. Discrete-time methods have also been proposed for nonlinear stability analysis of dc distribution systems [38].

In summary SSA is the most widely used method, because of its simplicity and good performance for the applications that comply with its conditions. In case higher order approximations are required, GSSA or KBM methods are normally applied. These two strategies are very similar conceptually, which are based on the segregation of the response of the variables in their harmonic contributions. However the implementation of this idea is completely different. GSSA is based on Fourier series, whereas KBM is based on a change of variables that creates a geometric framework. A comparison between these two approaches can be found in [39]. Furthermore, other methods have also been proposed to solve some problems as considering different types of carrier signals (TIMF), rapid analysis of steady-state behavior (CA), or considering digital effects (DAM). A comparison among these methods can be found in [30].

Focusing on smart grid applications, particularly on dc micro/nanogrids, there are many works related to individual EPCs that solve some of the challenges involved in these systems. However, it is also very important to analyze the phenomena that arise due to the interconnection of many EPCs, the intermittent behavior of both renewable sources and house loads, bidirectional power flow of batteries and grid connected converters, etc. In this context most of the proposals use the state-space averaging strategy, selecting the most common operating points in the system for modeling purposes, or the worst case scenario for small-signal stability assessment [40]–[46].

Clearly, the small-signal approximation implies a limitation in the modeling strategy, especially when the power converters are working in the boundary of two operation modes. In these cases the prediction of the small-signal models are seriously compromised. It is like the classical problem of dc/dc converters working close to the boundary between continuous and discontinuous modes.

In case of multiple EPCs, some other works consider the effect of the different switching frequencies of the EPCs using the extended state-space averaging technique, which is a modification of the generalized state-space averaging method in order to consider the harmonics of more than one switching

Table I: Comparison of the capabilities of averaging techniques for dc EPCs.
SSA (State-Space Averaging), DF (Describing Function), GSSA (Generalized State-Space Averaging), CA (Cyclic-Averaging), DAM (Discrete Averaged Model).

Technique	**Main advantages**	**Main drawbacks**	**Typical applications**
SSA	Simplicity. Good performance.	Small ratio switching period and time constants. Small-ripple. Slow variation of duty cycle.	Used broadly.
GSSA	Account for SSA limitations. Multifrequency approach.	Complexity increase exponentially with order.	Ripple estimation. DAB and resonant converters. Ripple-based controlled converters.
KMB	Multifrequency approach. Strong mathematical framework.	Small ratio switching period and time constants. Complexity.	Ripple estimation. DAB and resonant converters. Ripple-based controlled converters.
TIMF	Multifrequency approach. Systematic derivation from SSA.	Slow variation of duty cycle assumed. Moderate complexity.	Different kinds of carriers signals. Ripple estimation.
CA	Fast and accurate steady-state information.	Absence of dynamic information. Complexity.	Rapid analysis of high order resonant converters. Ripple estimation in steady-state.
DAM	Account for discretization effects.	Complexity.	High frequency. Ripple. Sampling, modulation, delays effects, etc.

This article has been accepted for publication in a future issue of this journal, but has not been fully edited. Content may change prior to final publication. Citation information: DOI 10.1109/TSG.2017.2707345, IEEE Transactions on Smart Grid

frequency [47]. The large-signal behavior is analyzed with the nonlinear model, but the model is linearized around an operating point in order to perform the small-signal stability assessment. In [48] a stabilization method is proposed for decentralized distribution systems, using discrete-time SSA models of the converters and applying neural networks to deal with nonlinearities and unknown dynamics. Therein a review of system-level stabilization techniques can be found. Finally, in [49] SSA is used to perform nonlinear stability analysis of dc microgrids by means of the computational continuation. Stability boundaries related with some of the parameters of the system are obtained with this method.

III. Modular and nonlinear analytical modeling techniques

DC micro/nanogrids are composed of several elements interconnected together in a specific architecture. In order to cope with large-scale systems, dozens of converters working in the same microgrid, some modular linear and nonlinear techniques have been proposed. Besides, due to system control strategies both static and dynamic nonlinearities must be taken into account, for which quasi-linear or multi-model techniques can be found. Quasi-linear approximations consider linear representation depending on some of the properties of the input signal, whereas multi-model approaches attempt to capture the nonlinear behavior of a system defining different representations of its response. Then, the output of the model will be function of certain variables that will activate some of the multiple representations.

A. G-parameters model

This is a two-port representation, very suitable for interaction assessments in EPC based systems, details about this method can be found in [50]. The main advantage of this technique is that very large systems can be divided into subsystems, which can be easily combined shaping any desired architecture. In order to build these blocks, the idea is to obtain the parameters that characterize the input-output small-signal dynamical behavior of each subsystem. In case of EPC inverse hybrid parameters (G-parameters) model is usually used, obtaining a Norton and Thevenin equivalent circuit. Therefore, the representation of the model, taking into account the effect of the controller, has the form shown in (6):

$$\begin{pmatrix} u_o \\ i_i \end{pmatrix} = \begin{pmatrix} G_{io} & -Z_o & G_{co} \\ Y_i & H_{oi} & G_{ci} \end{pmatrix} \begin{pmatrix} u_i \\ i_o \\ c \end{pmatrix} \tag{6}$$

where u and i are voltage and current, the subscript o and i indicates output and input respectively, and c represents the control signal. These transfer functions can be obtained from any of the averaged representations described in the previous section, after a linearization process around a particular operating point. This method has been widely used for the analysis of supply and load interactions, as well as for system-level impedance-based stability assessment [51]–[56].

B. Component connection model

The analysis of large systems is a multidisciplinary classical problem. Long ago, the component connection model was proposed as a methodology to interconnect the mathematical representation of different individual elements to obtain the system-level expression, for instance to perform nonlinear stability analysis. This method is basically a mapping among the inputs and outputs of the components that form the system, the matrix equation can be represented as follows (7):

$$\begin{pmatrix} a \\ y \end{pmatrix} = \begin{pmatrix} L_{11} & L_{12} \\ L_{21} & L_{22} \end{pmatrix} \begin{pmatrix} b \\ u \end{pmatrix} \tag{7}$$

where b and u are the vectors of inputs of the elements and the system, and a and y are the vectors of outputs of the elements and the system respectively. This is a very useful method to form large-scale systems with a modular approach. A review of this method with a collection of references can be found in chapter 7 of [57]. This method is applicable with any level of abstraction, for instance, in [58] it was used for EPC based systems, whereas in [59] it was used at EPC level in order to obtain an efficient and detailed model. This method seems very suitable for dc micro/nanogrids, however, references using this approach has not been found.

C. Describing function

A classical method to take into account some nonlinear effects in EPCs is to use the Describing Function (DF); a comprehensive coverage of this method can be found in [60]. Using this technique it is possible to determine limit cycles and the dynamic behavior of nonlinear systems.

This method is based on the quasi-linearization of the nonlinearity, i.e. to obtain a linear model except that it depends on some of the properties of the input signal. In order to apply this technique, the type of input signal is commonly specified and the nonlinear behavior is considered to be only dependent on the amplitude of the input signal. Thus the describing function method is often preceded by the kind of input considered. As most of the systems have a filtering effect, the most common input signals studied are: bias, sinusoid, Gaussian process, or a linear combination of them. The most extended method is to consider the sinusoidal-input describing function, often found just as describing function.

This technique considers a linearized feedback loop, (Fig. 4), where it is possible to divide the system into a linear, $G(j\omega)$ and a nonlinear part, where the nonlinear part is represented by the describing function $N(A,\omega)$, that depends on the amplitude, A, of its input signal, $x(t)$, and the frequency, ω. The feedback loop has a reference, $r(t)$, and an output, $w(t)$ that would depend on the rearrangement considered. The describing function is usually obtained using a Fourier first order approximation, reducing to $N(A)$. Using this representation the condition for a steady-state oscillation, considering a reference $r(t) = 0$, is (8):

$$1 + G(j\omega)N(A) = 0 \tag{8}$$

or equivalently (9):

This article has been accepted for publication in a future issue of this journal, but has not been fully edited. Content may change prior to final publication. Citation information: DOI 10.1109/TSG.2017.2707345, IEEE Transactions on Smart Grid

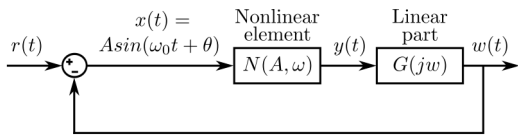

Figure 4: Feedback system with a nonlinear element represented by a describing function.

$$G(j\omega) = \frac{-1}{N(A)} \tag{9}$$

This method offers the possibility to represent graphically those functions to find approximations of limit cycles, which will be defined by the intersection between those curves, (x_o, w_o).

The assumptions considered in this approximation are that only one single nonlinear component exist, that it is time invariant, and that is has low-pass filter properties. The last condition is known as the *filter hypothesis*, which is necessary to ensure a sinusoidal input to the nonlinear part. Typical examples of these kinds of nonlinearities are saturated actuator, hysteresis in magnetic materials, or dead zones.

In the case of EPCs it has been used to represent the nonlinear behavior of inductors so continuous and discontinuous conduction mode behaviors can be estimated in [61] or to consider the nonlinearities of the switching process in [62].

D. Hybrid modeling

In essence EPCs are hybrid structures composed of a number of continuous dynamical systems controlled by discrete restrictions or commands. Consequently if a very detailed model is required, this hybrid nature must be taken into account. Hybrid systems theory was developed by Branicky et al. in the nineties, although preliminary studies were published many years before. In [63] a thorough explanation of this kind of system and a review of previous related works can be found. This modeling approach considers both continuous and discontinuous variables. The system dynamic depends on the evolution of the system equations, which are generally function of both types of variables.

Basically, the hybrid model represents a collection of continuous models combined with a switching function able to jump from one model to another when the state variables reach certain inherent values or when an external control signal is activated. These large-signal hybrid models may be summarized in the following equations (10):

$$\begin{aligned} \dot{x}(t) &= f(x(t), q(t), u(t)) \\ q^{+}(t) &= v(x(t), q(t), u(t)) \end{aligned} \tag{10}$$

where $x(t)$ is the system state vector, $q(t)$ is the discrete state vector, $q^{+}(t)$ is the next value of the discrete state vector, and $u(t)$ is the input vector. Through the $q(t)$ vector the different continuous models are switched as a function of certain inherent conditions defined through certain values of the state variables $x(t)$, or through the inputs $u(t)$.

This modeling technique has been applied in several different fields. In power electronics it is particularly relevant when multiple operation modes or saturation effects of the EPC must be taken into account. Within the hybrid modeling framework, different classes of representations can be considered. In [64] some classes of hybrid systems for EPC are reviewed and a PWA (Piece-Wise Affine) model is used for controller design and nonlinear stability analysis of a resonant converter. PWA models are switched affine systems whose modes only depend on the current location of the state vector. The state-space is partitioned into a finite number of polytopic cells, constructed as the intersection of half spaces. This technique provides the interesting possibility of mixing linear and nonlinear methods.

In [65], [66] hybrid modeling was used to develop predictive control strategies. Also Lyapunov stability analyses have been employed in order to assure global stability under every possible condition.

E. Linear parameter-varying model

A different way to represent nonlinear systems is by using the linear parameter-varying (LPV) models. These are linear state-space representations which dynamics depend on time-varying parameters. This method has been used extensively in many applications for controller design and stability analysis of nonlinear plants. In general, the mathematical representation can be expressed as follows (11):

$$\begin{aligned} \dot{x} &= A(p_i)x + B(p_i)u \\ y &= C(p_i)x + D(p_i)u \end{aligned} \tag{11}$$

where p_i are the variables affecting the dynamic of the system. Different methods can be used in order to represent the varying dynamics of the system, a thorough review of LPV model and its different method can be found in [67].

One of these methods is the *polytopic model*. As in the case of PWA model, this is a multi-model approach in which a collection of linear models are obtained around different operating points, however instead of switching among linear models, in this case the overall response is a weighted combination of the neighboring linear models. The state-space equations of this model are represented as follows (12):

$$\begin{aligned} \dot{x} &= \sum_{i=1}^{n} \omega_i(\alpha, \beta, ...)(A_i x + B_i u) \\ y &= \sum_{i=1}^{n} \omega_i(\alpha, \beta, ...)(C_i x + D_i u) \end{aligned} \tag{12}$$

where ω_i are the weighting functions of the linear models and α and β are the variables considered in the polytopic model as the ones that most affect the behavior of the system. This technique has been widely used in several fields. In [68] the stability of nonlinear systems is studied by means of Lyapunov methods applied to polytopic models solving LMI (Linear Matrix Inequality) problems. Also in [58], [69] polytopic models were proposed in order to obtain Lyapunov candidates for stability analysis of distributed power systems. Furthermore, different techniques are also based in this modeling approach as Takagi-Sugeno fuzzy logic models, where the weighting functions are obtained based on a number of if/then rules [70]–[72] or neural networks, where the system

This article has been accepted for publication in a future issue of this journal, but has not been fully edited. Content may change prior to final publication. Citation information: DOI 10.1109/TSG.2017.2707345, IEEE Transactions on Smart Grid

Table II: Comparison of the capabilities of modular and nonlinear techniques for dc EPC systems.
GP (G-parameters), CC (Component Connection), HM (Hybrid Modeling), LPV (Linear Parameter-Varying).

Technique	Main advantages	Main drawbacks	Typical applications
GP	Modularity. Simplicity. Good performance.	Small-signal.	Dynamic interactions. Impedance-based stability analysis.
CC	Modular approach for state-space models.	Just a mapping technique.	Nonlinear stability analysis. Very detailed models.
DF	Analysis of some nonlinear effects.	Single nonlinearity. Filter hypothesis	Limit cycles. Stability analysis. Nonlinearities in switching process, magnetics, etc.
HM	Continuous and discontinuous variables. Accuracy.	Complexity can be very high.	Used broadly.
LPV	Large-signal.	Complexity. Mild nonlinearities.	Nonlinear stability analysis and controller design.

learns from input/output data to be able to tune the model [73], [74].

The previous techniques seem very suitable for DC micro/nanogrids. G-parameters models are very convenient for large-scale small-signal simulations and dynamic interaction and stability analyses, because of its modular approach. For nonlinear assessments, DF, hybrid or LPV models can be employed. Very detailed low level models, as those obtained using hybrid models, are very useful for simulation purposes, but a simpler option is needed for stability analysis. For this or to obtain computationally efficient representations, DF or polytopic LPV models are a possibility. Besides, the component connection model technique can be used in order to obtain the overall system-level equations of the system from a modular perspective.

IV. Blackbox Modeling techniques

In actual applications, very often smart micro/nanogrids are implemented using devices from different manufacturers and the information given to the users is very limited to have a detailed model of the system dynamics. Having these limitations in mind, it is valuable to develop a model, accurate enough, to foresee the dynamics of the generators, loads, and storage units, ensuring the power quality and the stability of the system. If the manufacturers do not provide detailed and accurate information about the dynamic of the converters, the solution must come from the application of identification techniques to the EPCs.

In general, system identification is a very complex task. For linear systems there are several well-established techniques which are used broadly, whereas the case of nonlinear systems is much more difficult. Functional series (Volterra or Wiener series) were proposed as a general structure that can be applied to a wide class of systems. They are very useful to represent $mild$ nonlinearities, however the complexity of the model increases exponentially with the order considered.

A common approach to efficiently consider harsh nonlinearities is to include some knowledge about the system to select a more suitable structure for the blackbox model. Depending on the application and the level of knowledge about the system, it is possible to approximately write the state-space equations with unknown parameters that will be estimated afterwards. This method has been called greybox modeling.

If there is not much information about the system, another option is to use Wiener and Hammerstein structures. This approach separates the response in two parts: one linear to represent the dynamic of the system and one nonlinear that represents the static nonlinearities of the system.

In case that the nonlinearities affect also the dynamics of the system, more complex solutions has been proposed, as polytopic models. This technique consists on an interpolation of the response of linear models obtained in different operating points, as it was described in section III.E for analytical models.

Considering dc microgrids using DBS control, it is possible to find nonlinearities that are part of the system operation. These nonlinearities can be static, as the steady-state V-I relations shown in Fig. 3 for the different EPCs, or dynamic, such as the transient behavior of the converters in the different operation modes.

A. G-parameters model

The analytical G-parameters model has a blackbox counterpart. Here the linear models are obtained from measurements at the external ports of the EPC. In general, as the control signal is not usually available, the effect of the controller is mixed with the behavior of the plant, so an overall input-output response is obtained from the measurements (Fig. 5). An advantage of this modeling approach is that as a Thevenin/Norton representation of the converter is obtained, some physical insight is acquired. The physical meaning of the transfer functions identified is represented in (13):

$$\begin{array}{cc} \text{Audio-susceptibility} & \text{Input admittance} \\ G(s) = \left.\dfrac{\tilde{v}_{out}}{\tilde{v}_{in}}\right|_{\tilde{i}_{out}=0} & Y(s) = \left.\dfrac{\tilde{i}_{in}}{\tilde{v}_{in}}\right|_{\tilde{i}_{out}=0} \\ \text{Output impedance} & \text{Back current gain} \\ Z(s) = -\left.\dfrac{\tilde{v}_{out}}{\tilde{i}_{out}}\right|_{\tilde{v}_{in}=0} & H(s) = \left.\dfrac{\tilde{i}_{in}}{\tilde{i}_{out}}\right|_{\tilde{v}_{in}=0} \end{array} \tag{13}$$

The methodology to obtain the G-parameters for a converter working in a stationary operating point can be found in [75], [76]. This technique has also been applied to electronic power distribution systems based on COTS converters [77]. Having in mind the limitations of the small-signal assumption, this model offers a good representation of the dynamic of EPCs.

This article has been accepted for publication in a future issue of this journal, but has not been fully edited. Content may change prior to final publication. Citation information: DOI 10.1109/TSG.2017.2707345, IEEE Transactions on Smart Grid

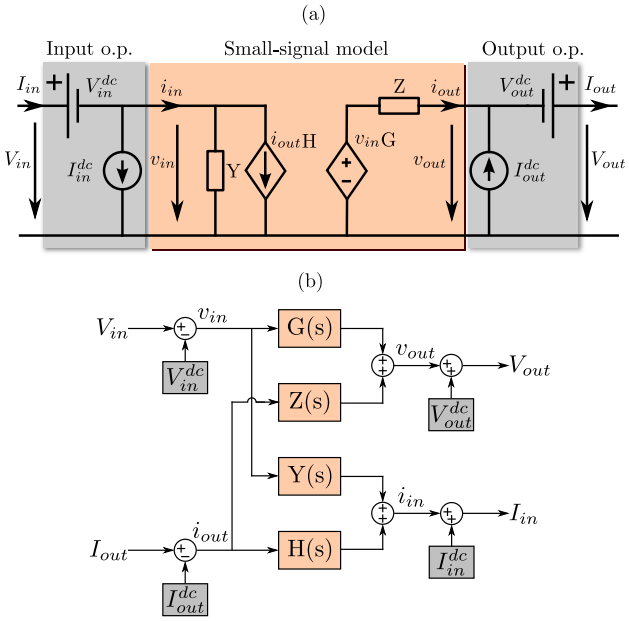

Figure 5: G-parameters model. (a) Equivalent electrical circuit, (b) Block diagram notation.

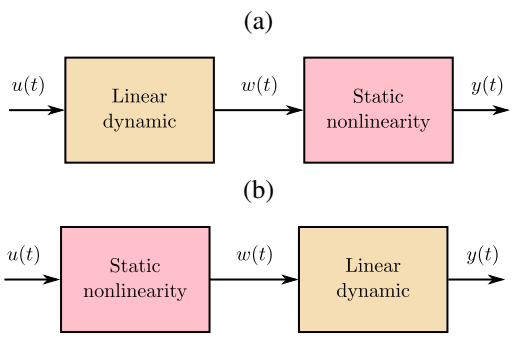

Figure 6: (a) Wiener model, (b) Hammerstein model.

B. Wiener-Hammerstein model

Some of the most popular blackbox nonlinear techniques are based on the Wiener and Hammerstein modeling strategies, which are valid when the nonlinearities are mainly reflected in steady-state variables. It is not unusual that while the dynamics of the system can be approximated by linear networks, static nonlinear effects appear due to saturations, nonlinear behavior of actuators or sensor, etc.

In Fig. 6, the block diagrams of the Wiener and Hammerstein models are represented. In the Wiener approach, a linear transfer function representing the system dynamics is followed by a nonlinear block, representing the steady-state operating point. In the Hammerstein model the structure is the opposite, having a nonlinear steady-state block followed by the linear block, able to foresee the system dynamics. Making the corresponding measurements, as indicated in [78], MATLAB/SIMULINK is able to identify the corresponding transfer functions of either Weiner or Hammerstein model.

There is a third possibility identified as Hammerstein-Wiener model, represented in Fig. 7a, where the system is represented

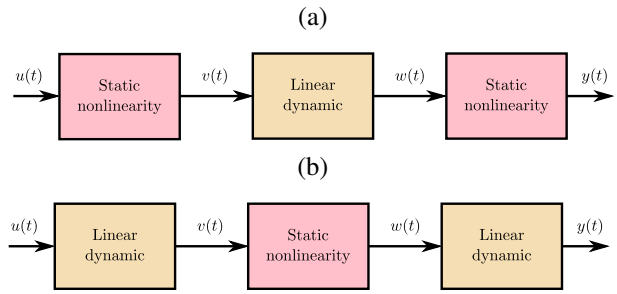

Figure 7: (a) Hammerstein-Wiener structure, (b) Wiener-Hammerstein structure.

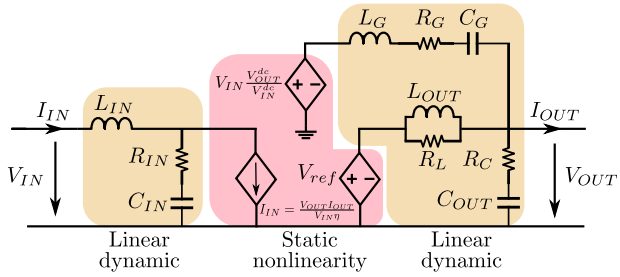

Figure 8: Oliver's Wiener-Hammerstein model.

by three blocks. The block in the middle is representing the linear system dynamics, and the stationary nonlinearities are represented by one block at the input and one block at the output. This structure is typically used when there are nonlinear physical conversions, e.g. nonlinear response of sensors or actuators. The identification of the corresponding transfer functions is also provided by MATLAB/SIMULINK, through data obtained with proper experimental measurements, as indicated in [78].

There are some other alternatives based on the same concept. As an example Oliver et al. proposed a model with a block diagram represented in Fig. 7b. In this model, especially developed for dc/dc converters, the steady-state nonlinear behavior is included in a specific nonlinear block in the middle. The system dynamics are divided in two passive networks, one at the input, modeling some of the input effects like soft and hard start and EMI filter, and one at the output representing the dynamics of the output filter and the control loops (Fig. 8). As described in this work [79], just with the common information included in the datasheets or with very simple tests, a very simple and quite accurate model of a general dc EPC can be obtained.

C. Polytopic model

Finally, also the polytopic model has an analogue blackbox counterpart. In this case, small-signal G-parameters models are used as the linearized model around different operating points. Therefore, compared with Wiener-Hammerstein structures, this model is able to capture the nonlinearities not only affecting the stationary, but also the transient behaviors. On the other hand, the complexity of this technique increases with the number of operating points considered and it grows exponentially with the

This article has been accepted for publication in a future issue of this journal, but has not been fully edited. Content may change prior to final publication. Citation information: DOI 10.1109/TSG.2017.2707345, IEEE Transactions on Smart Grid

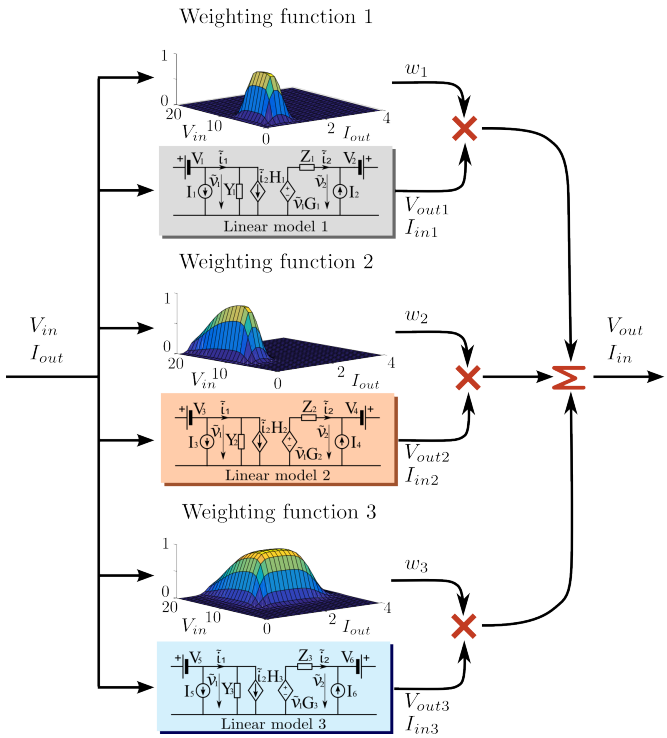

Figure 9: Polytopic model structure.

number of variables taken into account. So a tradeoff between accuracy and complexity has to be made.

The main concept is represented in Fig. 9, where the output of the model is a weighted combination of the output of several LTI models obtained in different operating points. The weighting functions are nonlinear trying to capture the nonlinear behavior of the converter.

This kind of model shows a number of degrees of freedom that are crucial in terms of the model complexity and accuracy. In particular, three are the key choices: the number of variables considered, the number and location of the operating points selected, and the type of weighting function. A detailed explanation of the development of blackbox polytopic models for EPCs can be found in [80].

More recently, the authors have proposed the use of this model for dc microgrids. In [81] the hybrid modeling techniques were included in the polytopic model in order to consider different operation modes of the EPCs. In [82] the integration of secondary-level control strategies into the identified polytopic models was studied. Besides, in [83] a first approach of blackbox nonlinear stability analysis of distributed energy systems using polytopic models was presented.

D. Other blackbox models

Some authors have proposed modeling structures which are a combination of the previous blackbox models. For instance in [84] a combination of G-parameters and Wiener-Hammerstein models is proposed. It represents the dynamic behavior of the converter with a G-parameters model, but steady-state values are given by a static nonlinear block.

Another possibility, proposed in [85], is to use a combination of all three methods depending on the necessities of each converter. For instance in that paper it is proposed to use G-parameters for input admittance and output impedance, the back current gain transfer function with a static behavior given by power balance, and the polytopic model for the audio-susceptibility. The main purpose of this proposal is to achieve a good compromise between accuracy and complexity for each converter.

In order to show graphically the capabilities and limitations of each of the black-box techniques discussed here, some simulations have been carried out, where their responses were compared with the response of the detailed switching model of the EPCs.

V. Comparison of the different blackbox modeling techniques

The blackbox modeling techniques proposed in the literature for dc EPCs can be classified into some of the three main structures presented in the previous section. This comparison focuses on archetypal cases of linear, static-nonlinear and dynamic nonlinear behaviors shown by EPC with some of the characteristics of those designed for dc microgrids.

The switching model will be compared with the G-parameters, Oliver's, and polytopic models in each case. These three models have been chosen because they are paradigmatic examples of their categories, so their capabilities and drawbacks can be easily represented. Subsequently other model structures will be discussed. Finally, a table comparing the models in terms of different features is presented as a summary of the key aspects.

First, the response of a regulated synchronous buck converter with input filter is presented. The converter has a constant dc input of $V_{in} = 48$ V and it is regulated with an inner current loop and an outer voltage loop. Besides, a droop control is included, with a voltage reference of $V_{ref} = 24$ V and a droop parameter of $K_{droop} = 0.1$. Also, it has a current limitation protection at $I = 10$ A (Fig. 10).

To include the droop control effect in the Oliver's model (Fig. 8) is straightforward, it is enough to include the droop equation in the voltage reference (see V_{ref} in Fig. 8) of the nonlinear static block, and the output linear dynamic will represent the effect of the control and the output filter. On the other hand, in order to include it in the G-parameters (Fig. 5) and polytopic models (Fig. 9) it is necessary to add the voltage reference as a new input and obtain the transfer functions from this input to the outputs of the model (output voltage and input current), the reader is referred to [82] for more details.

As for the change in control mode, the G-parameters model is not able to represent the new dynamic behavior. However, the polytopic model includes a new G-parameters model representing the dynamic behavior of the converter in current mode, as well as appropriate switching conditions to jump from one model to the other, these two methods are explained in detail in [81], [82]. Finally, in Oliver's model the current mode can be approximated just by changing the voltage reference source with a current source, as the output dynamic of most of the dc/dc converters in current mode can be approximated by a current source injected to the output capacitor.

This article has been accepted for publication in a future issue of this journal, but has not been fully edited. Content may change prior to final publication. Citation information: DOI 10.1109/TSG.2017.2707345, IEEE Transactions on Smart Grid

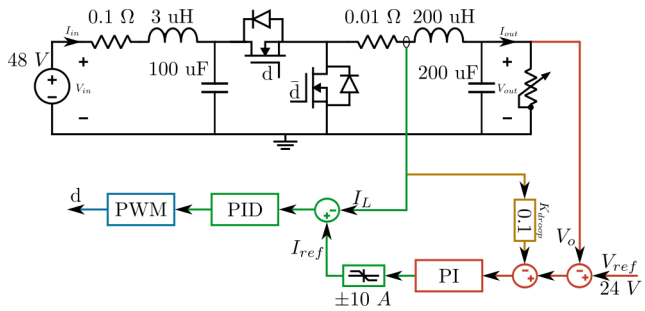

Figure 10: Regulated synchronous buck converter scheme.

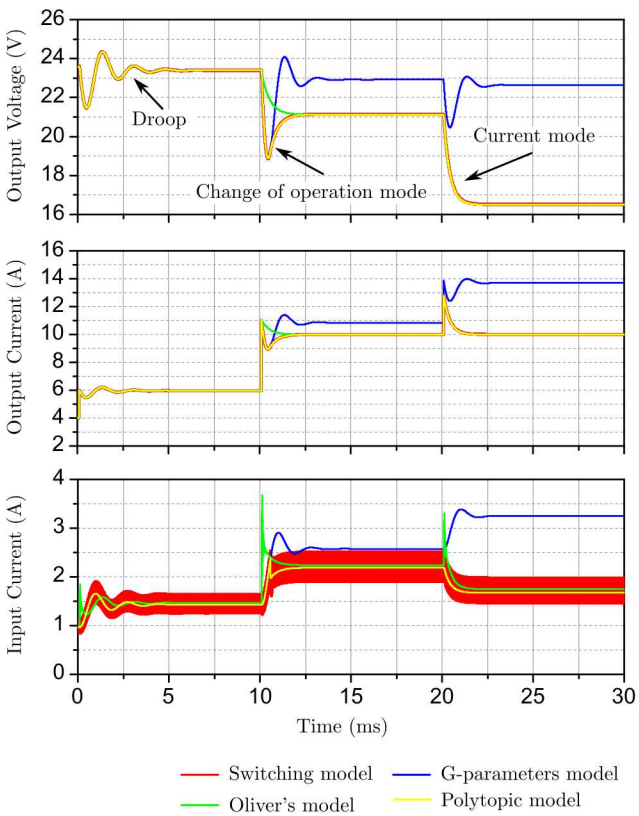

Figure 11: Comparison of performance of G-parameters, Oliver's, and polytopic models for a buck converter with droop control and current limitation.

In Fig. 11 three load steps are represented: the first shows the droop control effect, in the second the current limitation is reached and a transition between control modes is observed, and finally the third one takes place within the current control mode.

The three models represent accurately the output voltage response in droop mode. However, as Oliver's model represents the back current gain in terms of power balance taking into account the efficiency (see I_{in} in Fig. 8), the dynamic behavior of the input current during a load step is poorly represented. The G-parameters model includes a specific transfer function for the back current gain (see H(s) in (13)) so it is able to capture its behavior. The transition between modes is well represented only by the polytopic model. The G-parameters model does not include the current limitation so it goes on

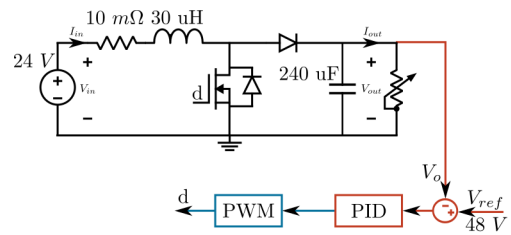

Figure 12: Regulated boost converter scheme.

with droop control, whereas Oliver's model changes to current mode when the output current is higher than $I_o = 10$ A. Nevertheless, the regulator senses the inductor current, therefore the transition between modes has a certain delay. It can be seen how the converter at the beginning of the step still behaves as a voltage source and, in the middle of the transitory, the inductor current reaches the limit value and starts to behave as a current source. In order to capture this kind of effect in [81] a dynamic weighting function was proposed, adding a transfer function that relates some of the output variables (current in this case) with some of the internal state variables (inductor current here). Finally, the output voltage dynamic within the current mode is well represented by Oliver's and polytopic models.

The second example is a regulated boost converter with a constant input voltage of $V_{in} = 24$ V (Fig. 12). It has a output voltage regulator with a constant reference of $V_{ref} = 48$ V. In Fig. 13 the response of the switching model is compared with its G-parameters, Oliver's and polytopic models. The G-parameters and Oliver's models were obtained around the operating point $V_{in} = 24$ V, $I_{out} = 2$ A, whereas the polytopic model considered 12 operating points: $V_{in} = \{16, 18, 20, 24\}$ V and $I_{out} = \{2, 10, 15\}$ A. Two load steps and two input voltage steps are performed. The results show that the models are able to capture the dynamic of the transient response of the first step, but considerable differences are appreciated as the operating conditions move away from the ones where both G-parameters and Oliver's models were identified. Only the polytopic model is able to capture the dynamic behavior of the converter in all cases. The reason is that boost converter dynamic behavior depends on the duty cycle and, hence, on the operating point. This variable dynamic behavior cannot be described by linear structures as G-parameters, nor with Wiener-Hammerstein models which include only static nonlinearities.

It has been shown that the G-parameters model can represent accurately the small-signal dynamic behavior of both input and output port of a dc EPC. Oliver's model on the other hand has a good performance for the output voltage when its behavior can be approximated by a second order response, which is enough in several cases, however the dynamic behavior of the back current gain is not considered. This inability to represent the back current gain would greatly deteriorate the results of cascaded connected converters. This model can also represent naturally changes in the reference, whereas for the G-parameters model it is necessary to include two extra transfer functions from the reference to the outputs. Regarding changes in operation mode, Oliver's model can represent current mode behavior

This article has been accepted for publication in a future issue of this journal, but has not been fully edited. Content may change prior to final publication. Citation information: DOI 10.1109/TSG.2017.2707345, IEEE Transactions on Smart Grid

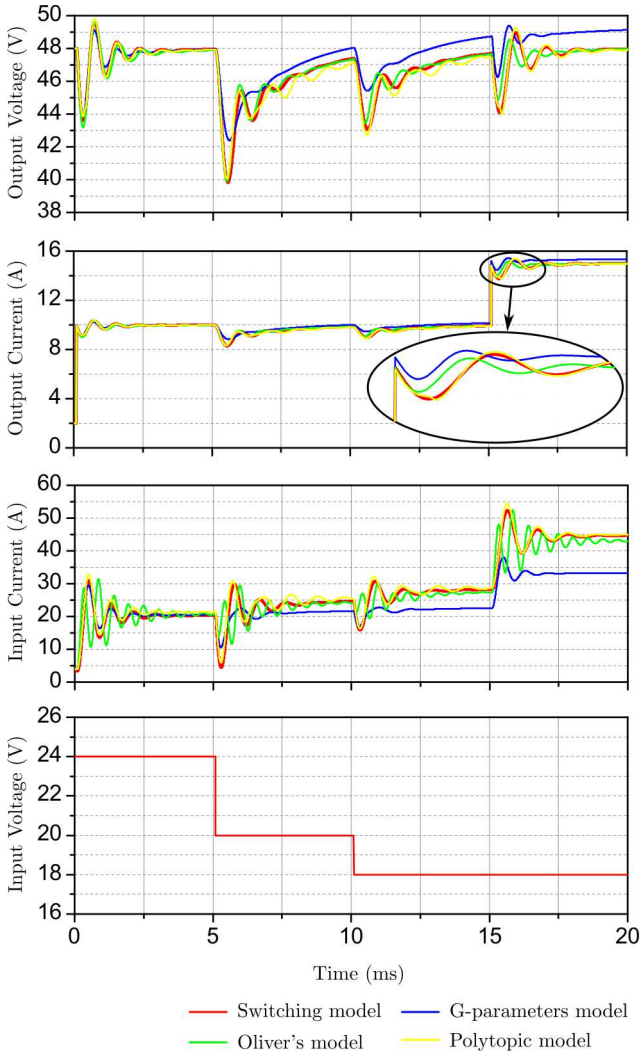

Figure 13: Poor performance of the G-parameters and Oliver's models to capture large-signal dynamic of a regulated boost converter, compared with the polytopic model.

by just changing the voltage source for the reference with a current source. The G-parameters model cannot represent this phenomenon. Finally, *these models cannot describe converters with variable dynamic behaviors depending on the operating point, the only option in this case is the polytopic model.*

Finally, table III shows a qualitative graphical summary comparing the performance of the different models presented before in various aspects.

VI. Conclusion

DC micro/nanogrids are expected to be systems composed of several different electronic power converters. Due to the complex dynamic interactions among them and the system-level control strategies implemented, the integration of this kind of elements is not a straightforward task. Therefore, electrical models able to capture these complex behaviors are needed.

This paper reviews the state-of-the-art of modeling techniques for power converters, focusing on system-level approaches. The first part focuses on analytical techniques, which are very suitable for designing purposes, whereas the second part considers the case of blackbox models, to deal with the problem of the integration of commercial-off-the-shelf converters. Different techniques are reviewed, from simple approximations to complex representations including their nonlinear behavior. As usual a tradeoff between accuracy and complexity has to be made, so different applications for each of the modeling approaches are discussed.

Lastly, the suitability of nonlinear blackbox models to represent the behavior of the dc nanogrids is justified. However, the literature on these kinds of techniques for dc electronic power converters is scarce. As dc power distribution systems are becoming a popular solution in many fields, e.g. data centers, smart grids, electrical vehicles, etc., the development of blackbox tools to assess the system-level integration of commercial converters could improve the time to market and minimize risk in the commissioning process.

Table III: Qualitative comparison of blackbox model structures performance for dc EPCs.
GPM (G-Parameters Model), OM (Oliver's Model), CM (Cvetkovic's Model [84]), VM (Valdivia's Model [85]), PM (Polytopic Model).

Characteristic	GPM	OM	CM	VM	PM
From datasheet	X	✓	X	X	X
From measurements	✓	∼	✓	✓	✓
Static-nonlinearities	X	✓	✓	✓	✓
Back current gain	✓	X	✓	✓	✓
Variable reference	∼	✓	∼	∼	∼
Control modes	X	∼	X	X	✓
Dynamic nonlinearities	X	X	X	∼	✓
Complexity	✓	✓	✓	∼	X

References

[1] *Environmental Engineering (EE); Power supply interface at the input to telecommunications and datacom (ICT) equipment; Part 3: Operated by rectified current source, alternating current source or direct current source up to 400 V*, Std. EN 300 132-3-1 - V2.1.1, 2012.
[2] *Environmental Engineering (EE); Earthing and bonding of 400 VDC data and telecom (ICT) equipment*, Std. EN 301 605 - V1.1.1, 2013.
[3] *Direct current power feeding interface up to 400 V at the input to telecommunication and ICT equipment*, Std. ITU-T L.1200, 2012.
[4] *External universal power adapter solutions for stationary information and communication technology devices*, Std. ITU-T L.1001, 2012.
[5] *Architecture of power feeding systems of up to 400 VDC*, Std. ITU-T L.1201, 2014.
[6] Public Overview of the EMerge Alliance Data / Telecom Center Standard Version 1.0. [Online]. Available: http://www.emergealliance.org
[7] T. Dragičević, X. Lu, J. C. Vasquez, and J. M. Guerrero, "Dc microgrids - part ii: A review of power architectures, applications, and standardization issues," *IEEE Trans. Power Electron.*, vol. 31, no. 5, pp. 3528–3549, May 2016.
[8] J. Guerrero, J. Vasquez, and R. Teodorescu, "Hierarchical control of droop-controlled dc and ac microgrids 2014; a general approach towards standardization," in *Proc. IEEE Annu. Conf. Ind. Electron. Soc.*, Nov 2009, pp. 4305–4310.
[9] Y. Ito, Y. Zhongqing, and H. Akagi, "Dc microgrid based distribution power generation system," in *Proc. Int. Power Electron. Motion Control Conf.*, vol. 3, Aug 2004, pp. 1740–1745.
[10] J. Schonberger, R. Duke, and S. D. Round, "DC-Bus Signaling: A Distributed Control Strategy for a Hybrid Renewable Nanogrid," *IEEE Trans. Ind. Electron.*, vol. 53, no. 5, pp. 1453–1460, 2006.

[11] D. Boroyevich, I. Cvetkovic, D. Dong, R. Burgos, F. Wang, and F. Lee, in *Proc. Int. Conf. Opt. Electr. Electron. Equip.*, May 2010, pp. 1369–1380.

[12] T. Dragičević, X. Lu, J. C. Vasquez, and J. M. Guerrero, "Dc microgrids - part i: A review of control strategies and stabilization techniques," *IEEE Trans. Power Electron.*, vol. 31, no. 7, pp. 4876–4891, July 2016.

[13] G. W. Wester and R. D. Middlebrook, "Low-frequency characterization of switched dc-dc converters," *IEEE Trans. Aerosp. Electron. Syst*, vol. AES-9, no. 3, pp. 376–385, May 1973.

[14] R. D. Middlebrook and S. Cuk, "A general unified approach to modelling switching-converter power stages," in *Proc. IEEE Annu. Power Electron. Spec. Conf.*, June 1976, pp. 18–34.

[15] S. Cuk and R. D. Middlebrook, "A general unified approach to modelling switching dc-to-dc converters in discontinuous conduction mode," in *Proc. IEEE Annu. Power Electron. Spec. Conf.*, June 1977, pp. 36–57.

[16] S. P. Hsu, A. Brown, L. Rensink, and R. D. Middlebrook, "Modelling and analysis of switching dc-to-dc converters in constant-frequency current-programmed mode," in *Proc. IEEE Annu. Power Electron. Spec. Conf.*, June 1979, pp. 284–301.

[17] V. Vorperian, "Simplified analysis of pwm converters using model of pwm switch. continuous conduction mode," *IEEE Trans. Aerosp. Electron. Syst*, vol. 26, no. 3, pp. 490–496, May 1990.

[18] ——, "Simplified analysis of pwm converters using model of pwm switch. ii. discontinuous conduction mode," *IEEE Trans. Aerosp. Electron. Syst*, vol. 26, no. 3, pp. 497–505, May 1990.

[19] Z. Zhang, Y. Y. Cai, Y. Zhang, D. J. Gu, and Y. F. Liu, "A distributed architecture based on microbank modules with self-reconfiguration control to improve the energy efficiency in the battery energy storage system," *IEEE Trans. Power Electron.*, vol. 31, no. 1, pp. 304–317, Jan 2016.

[20] L. Wang, D. Zhang, Y. Wang, B. Wu, and H. S. Athab, "Power and voltage balance control of a novel three-phase solid-state transformer using multilevel cascaded h-bridge inverters for microgrid applications," *IEEE Trans. Power Electron.*, vol. 31, no. 4, pp. 3289–3301, April 2016.

[21] S. R. Sanders, J. M. Noworolski, X. Z. Liu, and G. C. Verghese, "Generalized averaging method for power conversion circuits," *IEEE Trans. Power Electron.*, vol. 6, no. 2, pp. 251–259, Apr 1991.

[22] V. A. Caliskan, O. C. Verghese, and A. M. Stankovic, "Multifrequency averaging of dc/dc converters," *IEEE Trans. Power Electron.*, vol. 14, no. 1, pp. 124–133, Jan 1999.

[23] A. Emadi, "Modeling and analysis of multiconverter dc power electronic systems using the generalized state-space averaging method," *IEEE Trans. Ind. Electron.*, vol. 51, no. 3, pp. 661–668, June 2004.

[24] M. Daryabak, S. Filizadeh, J. Jatskevich, A. Davoudi, M. Saeedifard, V. K. Sood, J. A. Martinez, D. Aliprantis, J. Cano, and A. Mehrizi-Sani, "Modeling of lcc-hvdc systems using dynamic phasors," *IEEE Trans. Power Del.*, vol. 29, no. 4, pp. 1989–1998, Aug 2014.

[25] U. Javaid and D. Dujić, "Arbitrary order generalized state space average modeling of switching converters," in *Proc. IEEE Energy Conversion Congr. Exposition*, Sept 2015, pp. 6399–6406.

[26] W. Dai, "Modeling and efficiency-based control of interleaved llc converters for pv dc microgrid," in *Proc. IEEE Ind. Applicat. Soc. Annu. Meeting*, Oct 2015, pp. 1–8.

[27] P. T. Krein, J. Bentsman, R. M. Bass, and B. L. Lesieutre, "On the use of averaging for the analysis of power electronic systems," *IEEE Trans. Power Electron.*, vol. 5, no. 2, pp. 182–190, Apr 1990.

[28] B. Lehman and R. M. Bass, "Extensions of averaging theory for power electronic systems," *IEEE Trans. Power Electron.*, vol. 11, no. 4, pp. 542–553, Jul 1996.

[29] J. W. Kimball and P. T. Krein, "Singular perturbation theory for dc/dc converters and application to pfc converters," *IEEE Trans. Power Electron.*, vol. 23, no. 6, pp. 2970–2981, Nov 2008.

[30] H. Behjati, L. Niu, A. Davoudi, and P. L. Chapman, "Alternative time-invariant multi-frequency modeling of pwm dc-dc converters," *IEEE Trans. Circuits Syst. I, Reg. Papers*, vol. 60, no. 11, pp. 3069–3079, Nov 2013.

[31] M. P. Foster, H. I. Sewell, C. M. Bingham, D. A. Stone, D. Hente, and D. Howe, "Cyclic-averaging for high-speed analysis of resonant converters," *IEEE Trans. Power Electron.*, vol. 18, no. 4, pp. 985–993, July 2003.

[32] D. J. Shortt and F. c. Lee, "Improved switching converter model using discrete and averaging techniques," *IEEE Trans. Aerosp. Electron. Syst*, vol. AES-19, no. 2, pp. 190–202, March 1983.

[33] G. C. Verghese, M. E. Elbuluk, and J. G. Kassakian, "A general approach to sampled-data modeling for power electronic circuits," *IEEE Trans. Power Electron.*, vol. PE-1, no. 2, pp. 76–89, April 1986.

[34] F. Krismer and J. W. Kolar, "Accurate small-signal model for the digital control of an automotive bidirectional dual active bridge," *IEEE Trans. Power Electron.*, vol. 24, no. 12, pp. 2756–2768, Dec 2009.

[35] L. Scandola, L. Corradini, and G. Spiazzi, "Small-signal modeling of uniformly sampled phase-shift modulators," *IEEE Trans. Power Electron.*, vol. 30, no. 10, pp. 5870–5880, Oct 2015.

[36] D. Maksimovic and R. Zane, "Small-signal discrete-time modeling of digitally controlled pwm converters," *IEEE Trans. Power Electron.*, vol. 22, no. 6, pp. 2552–2556, Nov 2007.

[37] L. Meng, T. Dragicevic, J. Roldán-Pérez, J. C. Vasquez, and J. M. Guerrero, "Modeling and sensitivity study of consensus algorithm-based distributed hierarchical control for dc microgrids," *IEEE Trans. Smart Grid*, vol. 7, no. 3, pp. 1504–1515, May 2016.

[38] M. K. Zadeh, R. Gavagsaz-ghoachani, J. p. Martin, S. Pierfederici, B. Nahid-Mobarakeh, and M. Molinas, "Discrete-time tool for stability analysis of dc power electronics based cascaded systems," *IEEE Trans. Power Electron.*, vol. PP, no. 99, pp. 1–1, 2016.

[39] R. M. Bass and J. Sun, "Large-signal averaging methods under large ripple conditions [for power convertors]," in *Proc. IEEE Annu. Power Electron. Spec. Conf.*, vol. 1, May 1998, pp. 630–632 vol.1.

[40] A. A. A. Radwan and Y. A. R. I. Mohamed, "Linear active stabilization of converter-dominated dc microgrids," *IEEE Trans. Smart Grid*, vol. 3, no. 1, pp. 203–216, March 2012.

[41] S. Bae and A. Kwasinski, "Dynamic modeling and operation strategy for a microgrid with wind and photovoltaic resources," *IEEE Trans. Smart Grid*, vol. 3, no. 4, pp. 1867–1876, Dec 2012.

[42] S. Anand and B. G. Fernandes, "Reduced-order model and stability analysis of low-voltage dc microgrid," *IEEE Trans. Ind. Electron.*, vol. 60, no. 11, pp. 5040–5049, Nov 2013.

[43] F. Zhao, N. Li, Z. Yin, and X. Tang, "Small-signal modeling and stability analysis of dc microgrid with multiple type of loads," in *Proc. IEEE Power Syst. Technology Conf.*, Oct 2014, pp. 3309–3315.

[44] S. Liu, W. Zhu, Y. Cheng, and B. Xing, "Modeling and small-signal stability analysis of an islanded dc microgrid with dynamic loads," in *Proc. IEEE Environment Elect. Eng. Int. Conf.*, June 2015, pp. 866–871.

[45] P. Xuewei and A. K. Rathore, "Small-signal analysis of naturally commutated current-fed dual active bridge converter and control implementation using cypress psoc," *IEEE Trans. Veh. Technol.*, vol. 64, no. 11, pp. 4996–5005, Nov 2015.

[46] X. Lu, K. Sun, J. M. Guerrero, J. C. Vasquez, L. Huang, and J. Wang, "Stability enhancement based on virtual impedance for dc microgrids with constant power loads," *IEEE Trans. Smart Grid*, vol. 6, no. 6, pp. 2770–2783, Nov 2015.

[47] P. Shamsi and B. Fahimi, "Stability assessment of a dc distribution network in a hybrid micro-grid application," *IEEE Trans. Smart Grid*, vol. 5, no. 5, pp. 2527–2534, Sept 2014.

[48] S. Kazemlou and S. Mehraeen, "Decentralized discrete-time adaptive neural network control of interconnected dc distribution system," *IEEE Trans. Smart Grid*, vol. 5, no. 5, pp. 2496–2507, Sept 2014.

[49] S. Sanchez and M. Molinas, "Degree of influence of system states transition on the stability of a dc microgrid," *IEEE Trans. Smart Grid*, vol. 5, no. 5, pp. 2535–2542, Sept 2014.

[50] P. G. Maranesi, V. Tavazzi, and V. Varoli, "Two-part characterization of pwm voltage regulators at low frequencies," *IEEE Trans. Ind. Electron.*, vol. 35, no. 3, pp. 444–450, Aug 1988.

[51] B. H. Cho and F. C. Y. Lee, "Modeling and analysis of spacecraft power systems," *IEEE Trans. Power Electron.*, vol. 3, no. 1, pp. 44–54, Jan 1988.

[52] T. Suntio, M. Hankaniemi, and M. Karppanen, "Analysing the dynamics of regulated converters," *IET IEE Proc. Electric Power Applicat.*, vol. 153, no. 6, pp. 905–910, November 2006.

[53] M. Hankaniemi, M. Karppanen, T. Suntio, A. Altowati, and K. Zenger, "Source-reflected load interactions in a regulated converter," in *Proc. IEEE Annu. Conf. Ind. Electron. Soc.*, Nov 2006, pp. 2893–2898.

[54] M. Veerachary and A. R. Saxena, "G-parameter based stability analysis of dc-dc power electronic system," in *Proc. IEEE Joint Int. Conf. Power Syst. Technology Power India Conf.*, Oct 2008, pp. 1–4.

[55] J. Leppäaho, J. Huusari, L. Nousiainen, and T. Suntio, "Dynamics of current-fed converters and stability-assessment of solar-generator interfacing," in *Proc. IEEE Int. Power Electron. Conf.*, June 2010, pp. 703–709.

[56] S. Vesti, T. Suntio, J. A. Oliver, R. Prieto, and J. A. Cobos, "Impedance-based stability and transient-performance assessment applying maximum peak criteria," *IEEE Trans. Power Electron.*, vol. 28, no. 5, pp. 2099–2104, May 2013.

[57] W.-K. Chen, F. Bashir, S. Khanvilkar, A. Khokhar, and D. Schonfeld, *The Electrical Engineering Handbook*, 2005. [Online]. Available: http://www.sciencedirect.com/science/article/pii/B9780121709600500323

This article has been accepted for publication in a future issue of this journal, but has not been fully edited. Content may change prior to final publication. Citation information: DOI 10.1109/TSG.2017.2707345, IEEE Transactions on Smart Grid

[58] S. F. Glover, "Modeling and stability analysis of a power electronics based systems," Ph.D. dissertation, Dept. Elect. Eng., Purdue Univ., Lafayette, IN, 2003.

[59] K. Mino, J. Rico, and E. Barrera, "Modelling and simulation of power electronic converters using the component connection model," in *Proc. IEEE Int. Midwest Symp. Circuits Syst.*, Aug 2009, pp. 921–928.

[60] A. Gelb and W. Vander Velde, *Multiple-input describing functions and nonlinear system design*, ser. McGraw-Hill electronic sciences series. McGraw-Hill, 1968.

[61] S. C. Chung, S. R. Huang, and C. I. Lin, "Applications of describing functions to estimate the continuous and discontinuous conduction mode for a dc-to-dc buck converter," *IET IEE Proc. Electric Power Applicat.*, vol. 147, no. 6, pp. 513–519, Nov 2000.

[62] J. Shang, H. Li, X. You, T. Q. Zheng, and S. Wang, "A novel stability analysis approach based on describing function method using for dc-dc converters," in *Proc. Appl. Power Electron. Conf. Expo.*, March 2015, pp. 2642–2647.

[63] M. S. Branicky, "Studies in Hybrid Systems: Modeling, Analysis, and Control," Ph.D. dissertation, MIT, Cambridge, 1995.

[64] H. Molla-Ahmadian, A. Karimpour, N. Pariz, and F. Tahami, "Hybrid modeling of a dc-dc series resonant converter: Direct piecewise affine approach," *IEEE Trans. Circuits Syst. I, Reg. Papers*, vol. 59, no. 12, pp. 3112–3120, Dec 2012.

[65] T. Geyer, G. Papafotiou, and M. Morari, "Hybrid model predictive control of the step-down dc/dc converter," *IEEE Trans. Control Syst. Technol.*, vol. 16, no. 6, pp. 1112–1124, Nov 2008.

[66] F. M. Oettmeier, J. Neely, S. Pekarek, R. DeCarlo, and K. Uthaichana, "Mpc of switching in a boost converter using a hybrid state model with a sliding mode observer," *IEEE Trans. Ind. Electron.*, vol. 56, no. 9, pp. 3453–3466, Sept 2009.

[67] C. Hoffmann and H. Werner, "A survey of linear parameter-varying control applications validated by experiments or high-fidelity simulations," *IEEE Trans. Control Syst. Technol.*, vol. 23, no. 2, pp. 416–433, March 2015.

[68] S. Boyd, L. El Ghaoui, E. Feron, and V. Balakrishnan, *Linear Matrix Inequalities in System and Control Theory*, S. for Industrial and A. Mathematics, Eds., 1994.

[69] S. Sudhoff, S. Glover, S. Zak, S. Pekarek, E. Zivi, D. Delisle, and D. Clayton, "Stability Analysis Methodologies for DC Power Distribution Systems," in *Ship Control Syst. Symp.*, 2003, pp. 1–10.

[70] T. Takagi and M. Sugeno, "Fuzzy identification of systems and its applications to modeling and control," *IEEE Trans. Syst. Man Cybern.*, vol. SMC-15, no. 1, pp. 116–132, Jan 1985.

[71] K. Mehran, D. Giaouris, and B. Zahawi, "Modeling and stability analysis of dc-dc buck converter via takagi-sugeno fuzzy approach," in *Proc. IEEE Intelligent Syst. Knowledge Eng.*, vol. 1, Nov 2008, pp. 401–406.

[72] A. Kumar, A. S. Vempati, and L. Behera, "T-s fuzzy model based maximum power point tracking control of photovoltaic system," in *Proc. IEEE Fuzzy Syst.*, July 2013, pp. 1–8.

[73] R. J. Wai and L. C. Shih, "Adaptive fuzzy-neural-network design for voltage tracking control of a dc/dc boost converter," *IEEE Trans. Power Electron.*, vol. 27, no. 4, pp. 2104–2115, April 2012.

[74] M. Luzar, M. Witczak, M. Mrugalski, and Z. Kanski, "Robust fault identification of a polytopic lpv system with neural network," in *Proc. IEEE Int. Symp. Intelligent Control*, Oct 2014, pp. 1614–1619.

[75] L. Arnedo, D. Boroyevich, R. Burgos, and F. Wang, "Un-terminated frequency response measurements and model order reduction for black-box terminal characterization models," in *Proc. Appl. Power Electron. Conf. Expo.*, Feb 2008, pp. 1054–1060.

[76] I. Cvetkovic, D. Boroyevich, P. Mattavelli, F. Lee, and D. Dong, "Un-terminated, low-frequency terminal behavioral model of dc-dc converters," in *Proc. Appl. Power Electron. Conf. Expo.*, March 2011, pp. 1873–1880.

[77] S. Vesti, J. A. Oliver, R. Prieto, J. A. Cobos, and T. Suntio, "Stability and transient performance assessment in a cots-module-based distributed dc/dc system," in *Proc. IEEE Int. Telecommun. Energy Conf.*, Oct 2011, pp. 1–7.

[78] MathWorks, "System Identification Toolbox User's Guide," p. 1164, 2016. [Online]. Available: https://es.mathworks.com/help/pdf{_}doc/ident/ident.pdf

[79] J. Oliver, R. Prieto, J. Cobos, O. Garcia, and P. Alou, "Hybrid wiener-hammerstein structure for grey-box modeling of dc-dc converters," in *Proc. Appl. Power Electron. Conf. Expo.*, Feb 2009, pp. 280–285.

[80] L. Arnedo, D. Boroyevich, R. Burgos, and F. Wang, "Polytopic black-box modeling of dc-dc converters," in *Proc. IEEE Annu. Power Electron. Spec. Conf.*, June 2008, pp. 1015–1021.

[81] A. Francés, R. Asensi, O. García, R. Prieto, and J. Uceda, "A Black-box Modeling Approach for DC Nanogrids," in *Proc. Appl. Power Electron. Conf. Expo.*, 2016, pp. 1624–1631.

[82] ——, "The performance of polytopic models in smart dc microgrids," in *Proc. IEEE Energy Conversion Congr. Exposition*, Sept 2016, pp. 1–8.

[83] A. Francés, R. Asensi, O. García, and J. Uceda, "A blackbox large signal lyapunov-based stability analysis method for power converter-based systems," in *Proc. IEEE Workshop Control Modeling Power Electron.*, June 2016, pp. 1–6.

[84] I. Cvetkovic, D. Boroyevich, P. Mattavelli, F. Lee, and D. Dong, "Non-linear, hybrid terminal behavioral modeling of a dc-based nanogrid system," in *Proc. Appl. Power Electron. Conf. Expo.*, March 2011, pp. 1251–1258.

[85] V. Valdivia, A. Barrado, A. Roldan, C. Fernandez, and P. Zumel, "Black-box modeling of dc-dc converters based on transient response analysis and parametric identification methods," in *Proc. Appl. Power Electron. Conf. Expo.*, Feb 2010, pp. 1131–1138.

Airán Francés (GSM'16) received the M.Sc. degree in electrical engineering from the Universidad Politécnica de Madrid (UPM), Spain, in 2012, where he is currently working toward the Ph.D. degree.

He participated for two years in the European project XFEL, where he collaborated in the design and development of dc/dc power supplies for superconducting magnets. His current research interests include modeling, control and stability assessment of electronic power distribution systems and smart grids.

Rafael Asensi was born in Madrid, Spain, in 1966. He received the M.Sc. and Ph.D. degrees in electrical engineering from the Universidad Politécnica de Madrid (UPM), Madrid, Spain, in 1991 and 1998, respectively.

He joined the Department of Electrical Engineering in 1994, where he is currently an Associate Professor. His field of interest includes high frequency modeling of magnetic components and non-linear load modeling and simulation.

Óscar García (M'99) was born in Madrid, Spain, in 1968. He obtained the Ms and Ph.D. from the Universidad Politécnica de Madrid (UPM) in 1992 and 1999 respectively.

He is a Full Professor at the same university. He has been involved in more than 80 research projects, holds 8 patents and he has published more than 200 technical papers in conferences and journals.

Prof. García received the UPM Research and Development Award for faculty less than 35 years in year 2003 and the UPM Innovation in Education Award in year 2005. He is vice-director for Research, Doctoral Studies and Relations with Companies of the ETSII-UPM.

This article has been accepted for publication in a future issue of this journal, but has not been fully edited. Content may change prior to final publication. Citation information: DOI 10.1109/TSG.2017.2707345, IEEE Transactions on Smart Grid

Roberto Prieto (M'99) received the Master and Doctoral degrees in Electrical Engineering from the Universidad Politécnica de Madrid (UPM), Spain, in 1993 and 1998 respectively.

He is a Full Professor at this university. His contributions are focused in the field of power supply systems for telecom, aerospace, automotive and medical applications. His research interests include magnetic components, modeling, power electronics CAD tools and modeling of components and systems for power delivery. He has published over 250 technical papers and holds 2 patents. He has been actively involved in more than 50 R&D projects awarded with public funding in competitive programs, and above 40 direct contracts for research and development for different companies worldwide, including ANSYS, Alcatel, Intel, General Electric, Indra, Siemens, Philips, EADS, Boeing and Sener.

Prof. Prieto received the UPM Researcher Award for faculty younger than 35 years of age. He has advised 6 Doctoral dissertations, and conducted several professional seminars and tutorials.

Javier Uceda (M'83, SM'91, F'05) obtained the M.Sc. and Ph.D. degrees in Electrical Engineering by the Universidad Politécnica de Madrid (UPM), Spain in 1976 and 1979 respectively.

He is currently Full Professor in Electronics in the Electrical and Electronic Engineering Department at UPM. His research activity has been developed in the field of Power Electronics where he has participated in numerous national and international research projects. His main contributions are in the field of switched-mode power supplies and dc/dc power converters for telecom and aerospace applications. As a result of this activity he has published more than two hundred and fifty papers in international journals and conferences and he holds several national and international patents.

Prof. Uceda has received several individual and collective awards like the IEEE Third Millennium Medal, the Puig Adán Medal. He is also Honorary Doctor by the Universidad Ricardo Palma in Perú and the Colegio de Posgraduados in Mexico.