ON THE REDUCTION OF ERROR IN CERTAIN ANALOG COMPUTER CALCULATIONS BY THE USE OF CONSTRAINT EQUATIONS

Robert M. Turner
Lockheed Aircraft Corporation - Missiles and Space Division
1123 North Mathilda Avenue, Sunnyvale, California

This paper describes a method of reducing the error in certain analog computer calculations by the negative gradient technique where one has additional information about system performance in the form of constraint equations. In general, the technique leads to correction terms which are introduced into the system differential equations. In some cases, however, simulation is obtained by operating directly with the constraint relations themselves.

The theory is developed and several examples discussed at some length in order to show both the manner in which the corrections may be introduced, and the character of the corrected solutions.

Theory

Let the equation set I represent the system under investigation; i.e., it is the basic differential equation set describing the physics of the situation. Since any nth order differential equation may be written in the form of n first order equations no generality is lost and considerable convenience gained by adopting this presentation. The x_r are independent or driving functions.

$$\text{I}\quad \left|\begin{array}{l} \dot{y}_1 = f_1(x_1,x_2,\ldots x_p;y_1,y_2,\ldots y_n) \\ \dot{y}_2 = f_2(x_1,x_2,\ldots x_p;y_1,y_2,\ldots y_n) \\ \cdot \\ \cdot \\ \cdot \\ \dot{y}_n = f_n(x_1,x_2,\ldots x_p;y_1,y_2,\ldots y_n) \end{array}\right.$$

Let the equation set II describe the constraints in (or to be imposed upon) the physical system I.

$$\text{II}\quad \left|\begin{array}{l} \epsilon_1 = \epsilon_1(x_1,x_2,\ldots x_p;\dot{y}_1,\dot{y}_2,\ldots \dot{y}_n;y_1,y_2,\ldots y_n) \\ \cdot \\ \cdot \\ \cdot \\ \epsilon_q = \epsilon_q(x_1,x_2,\ldots x_p;\dot{y}_1,\dot{y}_2,\ldots \dot{y}_n;y_1,y_2,\ldots y_n) \end{array}\right.$$

The set II is written such that ϵ_j equals zero for all j. Now since the x_r are considered to be independent variables or driving functions, any deviation of the ϵ_j from zero must be due to incorrect values obtained from the y_i^u in the solution of set I, (where u = 0 for y_i and 1 for $\dot{y}_i$).

Since we wish to consider all the ϵ_j simultaneously, we take as our optimization criteria the minimization of a non-negative function E of ϵ_j where

$$E = \sum_{j=1}^{q} (\epsilon_j)^2 \tag{1}$$

Now for any given value of x_r and y_i^u we may find the change required in each of the y_i^u making up E by considering E as a surface in Euclidean N space. The vector giving the direction of greatest change in E is the gradient vector, ∇E. Since we are interested in the direction of greatest decrease of the function, we turn our attention to the negative gradient, which has the components

$$-\nabla E = 2 \sum_{j=1}^{q} \epsilon_j \frac{\partial \epsilon_j}{\partial y_i^u} \text{ for } \left[\begin{array}{l} u = 0,\ 1 \\ i = 1,2,\ldots n \end{array}\right. \tag{2}$$

Then we may assign to each Δy_i^u, where Δy_i^u is defined as the correction term to be added to the y_i^u obtained from the solution of I, the value

$$\Delta y_i^u = - \sum_{j=1}^{q} K_j \epsilon_j \frac{\partial \epsilon_j}{\partial y_i^u} \text{ for } \left[\begin{array}{l} u = 0,\ 1 \\ i = 1,2,\ldots n \end{array}\right. \tag{3}$$

That is, we add to each y_i^u a value proportional to the component of $-\nabla E$ in the y_i^u direction. K_j is a weighting factor determined by the importance attached to the particular ϵ_j. Depending upon the process of gradient determination and subsequent correction insertion one has either a true gradient method or steepest descent method. For the applications in this paper, the gradient is determined and the corrections added continuously. Thus no sequential series of steps is taken along one gradient before the next is determined.[1,2]

If we add these corrections directly and continuously to the positional values of the y_i^u, each member of the corrected differential equation set becomes

$$\begin{aligned} \dot{y}_i' &= f_i[x_1,x_2,\ldots x_p;y_1,y_2,\ldots y_n] + \Delta\dot{y}_i \\ y_i &= \int \dot{y}_i' dt + \Delta y_i \end{aligned} \tag{4}$$

where $\dot{y}_i'$ is the corrected rate term.

Note that Δy_i is not the integral of $\Delta\dot{y}_i$ as each arises independently from (3). We call this the E_p correction of I.

This method is in general quite difficult to implement on an analog computer due to the formation of algebraic loops in the generation of the error

terms. We may, however, take a different point of view and consider each Δy_i^u to arise from a change in the defining rate of y_i^u; i.e., we put

$$\frac{d}{dt}(\Delta y_i^u) = -\sum_{j=1}^{q} K_j \epsilon_j \frac{\partial \epsilon_j}{\partial y_i^u} \quad \text{for} \begin{cases} u = 0,1 \\ i = 1,2,\ldots n \end{cases} \tag{5}$$

This also will give to each y_i^u a correction in the desired direction but in quite a different manner due to the integration process. Thus each member of the corrected differential equation set becomes

$$\dot{y}_i = f_i(x_1,x_2,\ldots x_p;y_1,y_2,\ldots y_n) + \Delta y_i + \int \Delta \dot{y}_i \tag{6}$$

since when $u = 1$ in (5) a second derivative term in Δy_i arises which cannot be inserted in $\dot{y}_i$ without increasing the order of the system. We call (6) the E_R correction of I.

For certain algebraic applications (see Example 1) the system order is indeed increased, but in general, this is not desirable. Direct positional insertion may be used, however, so that both E_P and E_R corrections are applied in the same system. In this case, (6) becomes

$$\dot{y}_i = f_i(x_1,x_2,\ldots x_p;y_1,y_2,\ldots y_n) + \Delta y_i + \Delta \dot{y}_i \tag{7}$$

Example (4) considers this in some detail.

Simply stated, equation (3) shows that corrections may arise for all functions and their derivatives which occur explicitly in the constraint equations. Equations (4), (5), (6) and (7) show how the corrections can be added to the system I.

We shall next illustrate E_P and E_R corrections as applied to certain problems of a general nature arising in analog simulations. The E_R simulation is usually quite easy to obtain from the original system mechanization, since in general it only involves adding the correction terms into the several integrators. This, of course, enables one to compare corrected and uncorrected performance quite readily. E_P correction on the other hand is not so straight forward, and as previously noted, generally gives rise to stability problems on analog equipment.

Examples

Example 1

Consider the desired calculation

$$y_1 = \frac{x_2}{x_1} \tag{1.1}$$

Utilizing the zero order constraint, form

$$y_1 x_1 - x_2 = \epsilon \tag{1.2}$$

Taking

$$y_1 = y_1(0) + \Delta y_1 \tag{1.3}$$

Differentiating and applying (5)

$$\dot{y}_1 = \frac{d}{dt}(\Delta y_1) = -K_1 \epsilon_1 \frac{\partial \epsilon_1}{\partial y_1} = -K_1 \epsilon_1 x_1 \tag{1.4}$$

Thus for quasi-static x_1, x_2

$$y_1 = \frac{x_2}{x_1} + \left[y_1(0) - \frac{x_2}{x_1} \right] e^{-K_1 x_1^2 t} \tag{1.5}$$

For $x_1 > 0$ we note the possibility of incorporating it into the constant K_1. This saves one multiplication; i.e., put

$$\frac{d}{dt}(\Delta y_1) = -K_1 \epsilon_1 \quad \text{for} \quad x_1 > 0 \tag{1.6}$$

Table I shows the type of convergence to the correct solution for several cases where $x_2 = x_1$. Only the exponents are shown since the solution form is the same as (1.5). Note that for the case $x_1 = x_2 = \sin \omega t$ (1.4) will not give correction until t becomes large enough to offset $\frac{\sin 2\omega t}{2\omega}$.

Further investigation of the (non-linear) equations (1.4) and (1.6) is required to establish convergence criteria for arbitrary x_1 and x_2. Equation (1.4) is mechanized in Figure (1.2) with the aid of the symbols in Figure (1.1).

TABLE I

Using (1.4)	Using (1.6)
x_1 and x_2 constant: $-K_1 x_1^2 t$	$-K_1 x_1 t$
$x_1 = x_2 = t$: $-K_1 t^3/3$	$-K_1 t^2/2$
$x_1 = x_2 = \sin \omega t$: $\frac{K_1}{2}(t - \frac{\sin 2\omega t}{2\omega})$	Not applicable since x_1 is not always > 0
$x_1 = x_2 = A + \sin \omega t$: $-K_1[A^2 t + t/2 + 2A/\omega - 2A/\omega \cos\omega t - 1/4\omega \sin 2\omega t]$	For $A > 1$ $-K_1[At + \frac{1}{\omega}(1-\cos \omega t)]$

In Figure 1.2 G is to be as large as possible since it effectively increases $K_1 . x_1, x_2, N_1$ and N_2 are to be taken as quasi-static where N_1 and N_2 are errors which exist at the points indicated. The instantaneous differential equation is

$$\dot{y}_1 = -K_1(\epsilon_1 + N_1)x_1 + N_2 \tag{1.7}$$

which yields the instantaneous solution form

$$y_1 = y_1(0)e^{-K_1 x_1^2 t} + [\frac{x_2}{x_1} - \frac{N_1}{x_1} + \frac{N_2}{K_1 x_1^2}](1-e^{-K_1 x_1^2 t}) \tag{1.8}$$

Attenuation of the error through the first multiplication channel is as $\frac{1}{x_1}$ and through the second by $\frac{1}{K_1 x_1^2}$.

Because of this noise attenuation it becomes practical to use division in forming special

functions; for example:

Given $\dot{y}$ to form $z = \ln y$ we note

$$\dot{z} = \frac{\dot{y}}{y} \tag{1.9}$$

Here $\dot{z}$ is formed by the division circuit, then integrated to give z. The method is useful provided z is used ultimately in the equation for $\dot{y}$ (i.e., the z integration is not open loop). A particular advantage obtains in that the range of the ln function is determined merely by an initial condition on the integrator.

Notice that when (1.6) is applicable, two independent x_2/x_1 and x_3/x_1 divisions are obtainable with one multiplier. For either (1.4) or (1.6), $\dot{y}$ is available, though greatly attenuated and noisy.

Example 2

Inverse function generators in the feedback loop of high gain amplifiers are frequently used to generate monotonic functions having steep slopes. The method is advantageous because of the reciprocal relation between the slopes. Approaching this problem from the point of view of a constraint relation yields the following.

Let $y = f(x)$ be the desired function, given x.

Now

$$f^{-1}(y) = x \quad \text{and} \quad \epsilon \equiv f^{-1}(y) - x \tag{2.1}$$

Using (5):

$$\frac{d}{dt}(\Delta y) = \dot{y} = -K\epsilon \frac{\partial \epsilon}{\partial y} \tag{2.2}$$

For $y = \sqrt{x}$ we see that $f^{-1}(y) = y^2$ and so

$$\dot{y} = -2K\epsilon y; \; y(0) = \sqrt{x(0)} \tag{2.3}$$

$$\epsilon = y^2 - x \tag{2.4}$$

Performance is good except near $x = 0$. (2.3) is mechanized in Figure 2.1.

Example 3

The problem of finding R, $\sin\varphi$ and $\cos\varphi$ given x and y frequently arises in coordinate transformations. When $\dot{\phi}$ is not available and the frequency too high for standard circuits, the following method has been used with success.

Since

$$\left.\begin{aligned} x^2 + y^2 &= R^2 \\ x &= R\cos\varphi \\ y &= R\sin\varphi \end{aligned}\right] \tag{3.1}$$

we put

$$\epsilon_1 = R\cos\varphi - x \tag{3.2}$$

$$\epsilon_2 = R\sin\varphi - y \tag{3.3}$$

Note that

$$R = x\cos\varphi + y\sin\varphi \tag{3.4}$$

Thus ϵ_1 and ϵ_2 enable us to find $\sin\varphi$ and $\cos\varphi$; (3.4) determines R.

Using (5)

$$\frac{d}{dt}(\Delta\cos\varphi) = -2K_1\epsilon_1 \frac{\partial\epsilon_1}{\partial\cos\varphi} \tag{3.5}$$

$$\equiv -K\epsilon_1 \text{ for } R > 0$$

$$\frac{d}{dt}(\Delta\sin\varphi) = -2K_1\epsilon_2 \frac{\partial\epsilon_2}{\partial\sin\varphi} \tag{3.6}$$

$$\equiv -K\epsilon_2 \text{ for } R > 0$$

(which are mechanized in Figure 3.1)

The previous examples have illustrated methods of using the system equations themselves to form error (or constraint) equations. Minimizing these led directly to a solution of the system equations.

We shall next consider two examples of systems which are amenable to error correction in the more general sense of constraining the solution of I to satisfy the relations in II by the use of E_P and/or E_R corrections.

Example 4

Amplitude stabilization of the harmonic oscillator using essentially E_R type correction has been treated extensively in the literature.[3,4] However, as this second-order system affords a particularly simple vehicle for obtaining qualitative solutions which aid in understanding the roles of the correction terms, it will again be considered here. To this end, then, let it be desired to generate the sine and cosine of the angle φ where $\dot{\phi}$ is given.

$$y_2 = \sin\varphi \rightarrow \dot{y}_2 = \dot{\phi}\cos\varphi \tag{4.1}$$

$$y_1 = \cos\varphi \rightarrow \dot{y}_1 = -\dot{\phi}\sin\varphi \tag{4.2}$$

Thus the system equations are :

$$\dot{y}_2 = \dot{\phi}y_1 \tag{4.3}$$

$$\dot{y}_1 = -\dot{\phi}y_2 \tag{4.4}$$

The constraint relations we adopt here are:

$$\epsilon_1 = y_1^2 + y_2^2 - 1 \tag{4.5}$$

and

$$\epsilon_2 = y_1\dot{y}_2 - y_2\dot{y}_1 - \dot{\phi} = \dot{\phi}\epsilon_1 \tag{4.6}$$

ϵ_2 is a measure of system rate error, since

$$\frac{d}{dt}\left[\tan^{-1}\frac{y_2}{y_1}\right] = \frac{y_1\dot{y}_2 - y_2\dot{y}_1}{y_1^2 + y_2^2} - \dot{\phi} \tag{4.7}$$

Thus

$$y_1\dot{y}_2 - y_2\dot{y}_1 = \dot{\phi}(y_1^2 + y_2^2) \tag{4.8}$$

and

$$y_1\dot{y}_2 - y_2\dot{y}_1 - \dot{\phi} = \dot{\phi}\epsilon_1 \tag{4.9}$$

Using ϵ_1 to obtain Δy_1 and Δy_2:

$$\Delta y_1 = -2K_{01}\epsilon_1 y_1 \tag{4.10}$$

$$\Delta y_2 = -2K_{02}\epsilon_1 y_2 \tag{4.11}$$

Using ϵ_2 to obtain $\Delta\dot{y}_1$ and $\Delta\dot{y}_2$:

$$\Delta\dot{y}_1 = K_{11}\dot{\phi}\epsilon_1 y_2 \tag{4.12}$$

$$\Delta\dot{y}_2 = -K_{12}\dot{\phi}\epsilon_1 y_1 \tag{4.13}$$

The weighting functions are deliberately identified in the manner shown in order to determine the effect of mismatch; always an important consideration in analog work.

Using (7), the corrected system equations become:

$$\dot{y}_2 = \dot{\phi}y_1 + \Delta y_2 + \Delta\dot{y}_2 \tag{4.14}$$

$$\dot{y}_1 = \dot{\phi}y_2 + \Delta y_1 + \Delta\dot{y}_1 \tag{4.15}$$

Carrying out the work assuming quasi-static ϵ_1 (which amounts to treating it as sign invariant during the instantaneous integration process) yields

$$y_2 = Ae^{-\alpha t}\sin\omega t \tag{4.16}$$

$$y_1 = e^{-\alpha t}\sin(\omega t + \underline{\varphi}) \tag{4.17}$$

where

$$A = 1 + \frac{\epsilon_1}{2}(K_{11} - K_{12}) \tag{4.18}$$

$$\alpha = (K_{01} + K_{02})\epsilon_1 \tag{4.19}$$

$$\omega = \dot{\phi}[1 - \epsilon_1(K_{11} + K_{12})] \tag{4.20}$$

$$\underline{\varphi} = \tan^{-1}\frac{\omega}{\epsilon_1(K_{02} - K_{01}} \tag{4.21}$$

and where second-order terms have been dropped.

An analysis of (4.16) and (4.17) shows that the system process is such as to decrease the absolute value of ϵ_1. (4.18) and (4.21) give the detrimental effects of mismatch. Note that damping arises only from E_R, and rate correction (to first order terms) from E_P.

The mechanization of (4.3) and (4.4) with E_R corrections arising from ϵ_1 is shown in Figure 4.1. Stable frequencies in excess of 150 cps have been generated using this technique.

Example 5

This final example will treat with the compound pendulum of Figure 5.1 having a total angular excursion of $\pm\pi/2$ radians. The non-linear differential equation describing this system may be solved by elliptic integrals.

Although quite simple to mechanize on an analog computer, the errors after 5 seconds are prohibitive for a pendulum having a 5 cps frequency. The introduction of two constraint relations is necessary to preserve solution integrity.

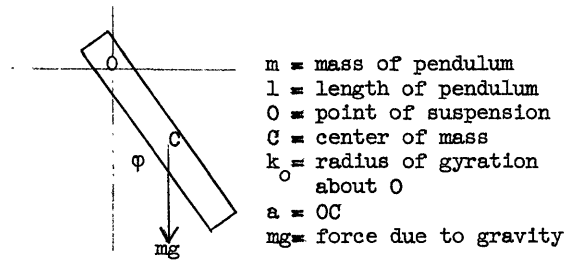

Figure 5.1

Parameters and Definitions

m = 1 gram	$A = \frac{ga}{ko^2}$
l = 1.2 cm	$B = 1/2\ mk_o^2$
a = .346 cm	G = mga
$k_o^2 = .2394$	$y_2 = \sin\varphi$
$g = 980\ cm/sec^2$	$y_1 = \cos\varphi$

These parameters give a 5 cps frequency for an excursion of $\pm\pi/2$ radians. Initially the pendulum is at $\varphi = +\pi/2$ which is defined as the point of minimum kinetic energy.

The energy equation is

$$B\dot{\phi}^2 + G(1 - \cos\varphi) = G \tag{5.1}$$

Differentiating this leads to the system equations

$$\dot{\phi} = \omega \qquad \omega = -Ay_2 \tag{5.2}$$

where y_2 and φ are related by

$$\dot{y}_2 = \dot{\phi}y_1 \qquad \dot{y}_1 = -\dot{\phi}y_2 \tag{5.3}$$

y_2 is the driving function for (5.2). Any errors arising in $\dot{\omega}$ and $\dot{\phi}$ (we do not employ φ in the mechanization) arise from the product Ay_2 and the subsequent integration.

$\dot{\phi}$ is the driving function for (5.3). We know that amplitude stabilization of (5.3) is desirable, but here (5.1) imposes yet another constraint upon the y_1 formed in (5.3).

Using both the total energy and the amplitude stabilization relation, we define

$$\epsilon_1 = y_1^2 + y_2^2 - 1 \tag{5.4}$$

$$\epsilon_2 = B\dot{\phi}^2 - Gy_1 \tag{5.5}$$

from which one obtains (using 3):

$$\begin{aligned} \Delta\dot{\omega} &= 0 \\ \Delta\omega = \Delta\dot{\phi} &= -2K_2\epsilon_2 B\dot{\phi} \\ \Delta\varphi &= -K_2\epsilon_2 y_2 G \end{aligned} \tag{5.6}$$

$$\begin{aligned} \Delta\dot{y}_2 &= \Delta\dot{y}_1 = 0 \\ \Delta y_2 &= -2K_1\epsilon_1 y_2 \\ \Delta y_1 &= -2K_1\epsilon_1 y_1 + K_2\epsilon_2 G \end{aligned} \tag{5.7}$$

Using (7):

$$\begin{aligned} \dot{\phi} &= \omega + \Delta\varphi + \Delta\dot{\phi} \\ \dot{\omega} &= -Ay_2 + \Delta\omega \end{aligned} \tag{5.8}$$

$$\begin{aligned} \dot{y}_2 &= \dot{\phi}y_1 + \Delta y_2 \\ \dot{y}_1 &= -\dot{\phi}y_2 + \Delta y_1 \end{aligned} \tag{5.9}$$

Note that an attempt to include either $\Delta\varphi$ or $\Delta\dot{\phi}$ in the $\dot{\phi}$ equation leads to an unstable algebraic loop since ϵ_2 contains $\dot{\phi}^2$.

With this restriction, the corrected system is

$$\begin{aligned} \dot{\phi} &= \omega \\ \dot{\omega} &= -Ay_2 - 2K_2\epsilon_2 B\dot{\phi} \end{aligned} \tag{5.10}$$

$$\begin{aligned} \dot{y}_2 &= \dot{\phi}y_1 - 2K_1\epsilon_1 y_2 \\ \dot{y}_1 &= -\dot{\phi}y_2 - 2K_1 y_1\epsilon_1 + K_2\epsilon_2 G \end{aligned} \tag{5.11}$$

Any attempt to implement (6.10) and (6.11) leads immediately to scaling difficulties due to the disparity of B and G. Further, the units of $\Delta\omega$ and Δy_1, make impossible a consistent definition in the units of K_2. Actually, this is to be expected for our treatment of K_j has neglected any mention of u and i which certainly must be considered if any rational system of units is to be maintained in the several corrections.

The dilemma confronting us is quite fundamental, for if the K_j are to be determined by a consideration of i and u as well as j, what are to be the weights attached to them? Unless this is known, the corrections will not lie along the negative gradient as desired. We do know, however, that these newly considered constants will all be positive. Thus, no matter what weights are attached to them, the resulting correction vector will decrease E though certainly not in general along its negative gradient. For small E this is probably not significant, but in any case the remedy seems to be to make all the K_j and their factors as large as possible in order to hasten the (less efficient) minimization process.

Thus, except in simple systems where no inconsistency in units arises for the correction terms, we shall follow this rule.

This has been done for (5.10) and (5.11) which are mechanized in Figure (5.2). Deviations from the theoretical solution were monitored for a variety of cases and the results are given in Plates I and II.

Plate I shows the results after 5 seconds of solution time of

1. No correction
2. Amplitude correction into the cosine only
3. Amplitude correction into the sine only
4. Amplitude correction into both the sine and cosine
5. Correction in the potential energy only
6. Correction in the kinetic energy only
7. Correction in both kinetic energy and potential energy.

All of these solutions had errors growing with time.

Plate II gives the results of applying corrections arising from both ϵ_1 and ϵ_2. All of these solutions are stable, but notice that they may be substantially in error unless the corrections are added as specified by (5.10) and (5.11).

In accordance with the theory of keeping K_j as large as possible here, it was noted that decreasing K_1 or K_2 degraded system performance.

References

1. A. Feldbaum, "An Automatic Optimizer", Automatika i Telemekhanika 19:731-43, Aug. 1958. See "Automation Express", Nov. 1958.
2. H. Meissinger, "Meissinger on Steepest Descent", "Instruments and Automation", Sept. 1958.
3. J. Corbett, et al, "Stabilization of Computer Circuits", WADC Tech Report 57-425, Nov.1957.
4. R. Howe and E. Gilbert, "Trigonometric Resolution in Analog Computers by Means of Multiplier Elements", IRE Transactions, Vol.EC 6, June '57.

Acknowledgement

The idea for this paper arose as a result of investigating the division circuit illustrated in Example 1. This circuit is due to R. R. Favreau, and came to my knowledge from W. Brunner, both of Electronic Associates, Inc., Princeton, New Jersey. To Mr. Brunner I am also indebted for many helpful criticisms and comments which have influenced the final form of presentation.

SYMBOLS

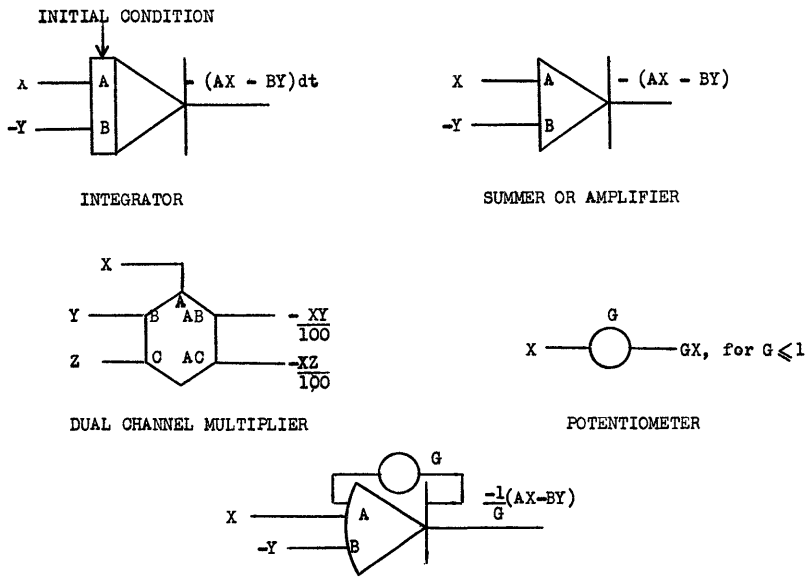

FIGURE 1.1

MECHANIZATION OF (1.5)

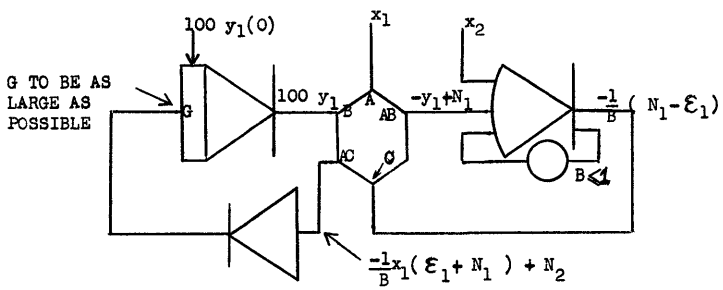

FIGURE 1.2

MECHANIZATION OF (2.3)

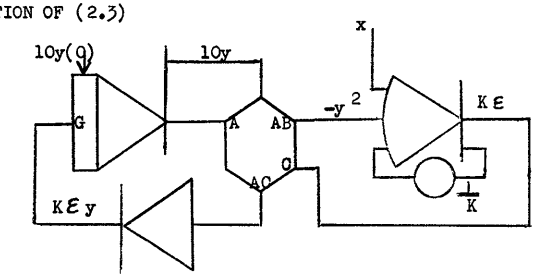

FIGURE 2.1

MECHANIZATION OF (3.5) AND (3.6)

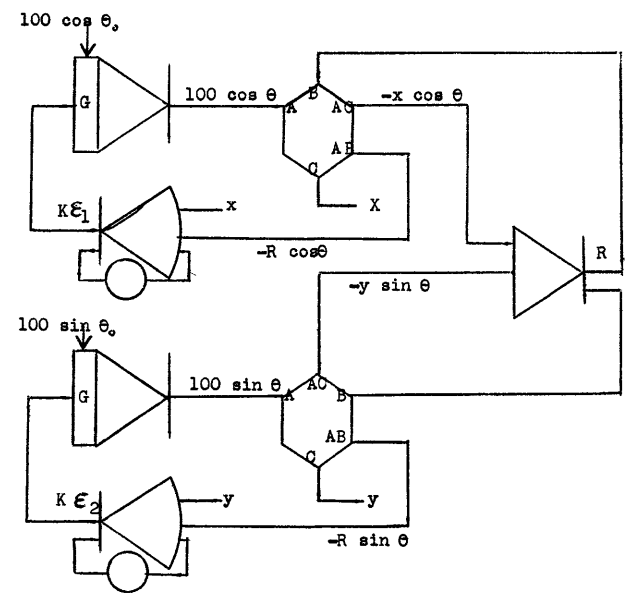

FIGURE 3.1

MECHANIZATION OF (4.3) AND (4.4)

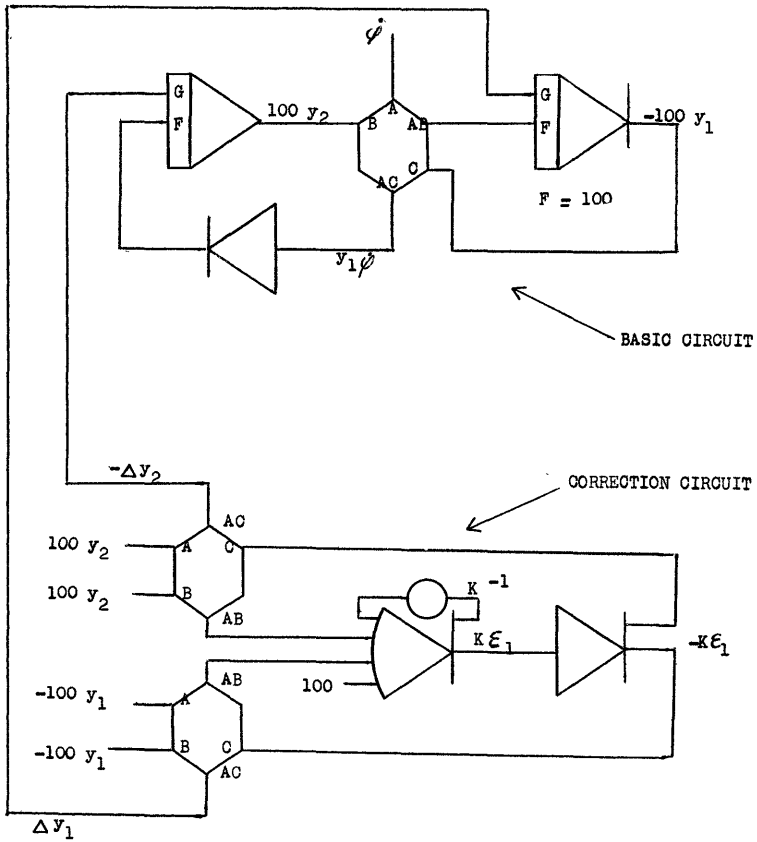

FIGURE 4.1

MECHANIZATION OF (5.10) AND (5.11)

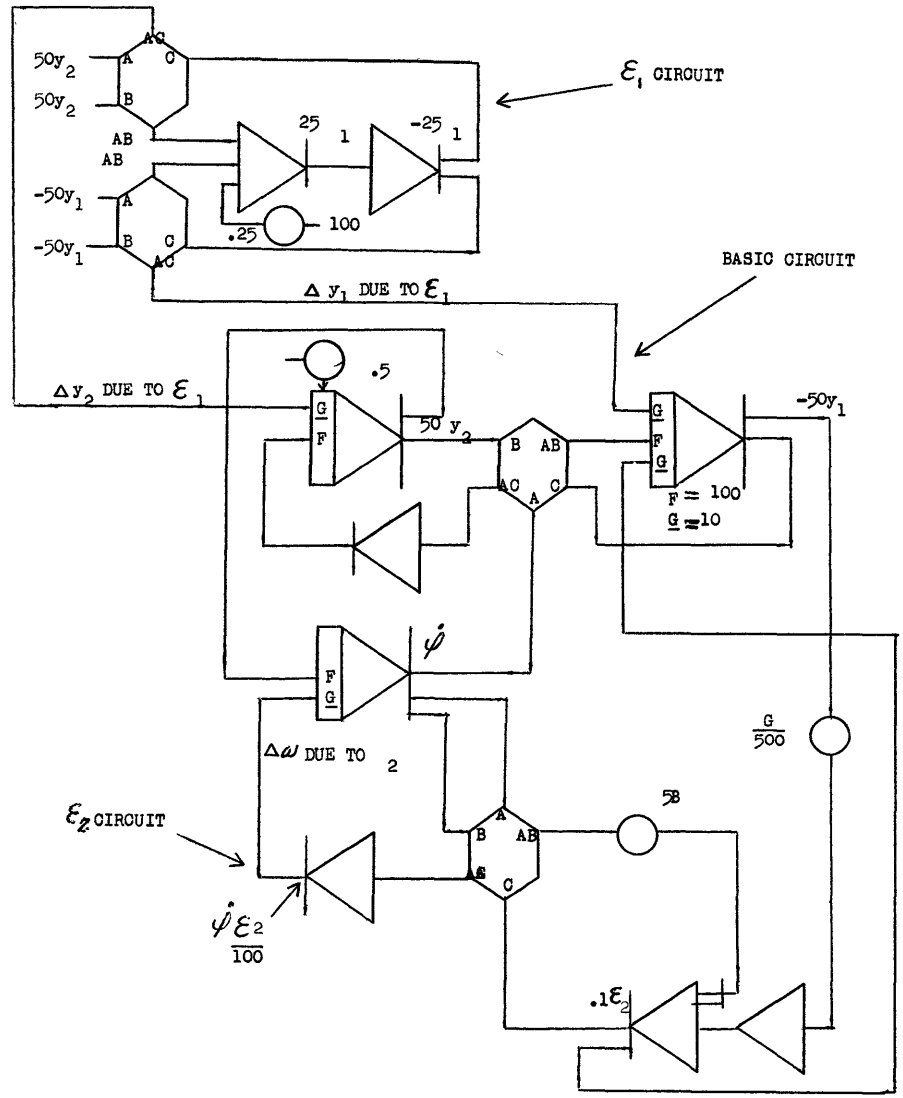

PLATE I

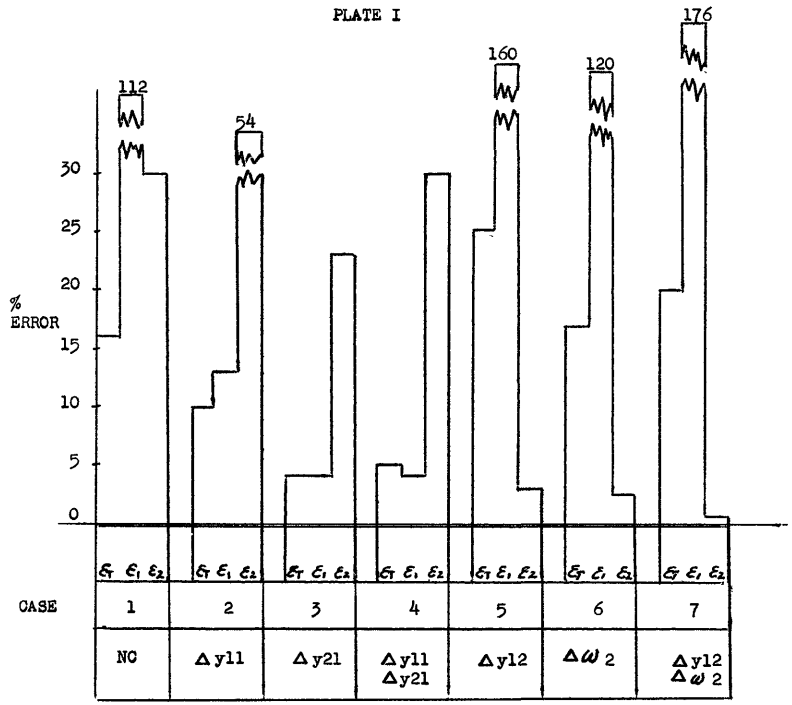

NC means no correction was added
y11 means that the correction in y_1 due to ε_1 was added, etc.

To define the % Error, ε_1 was referred to 1.
ε_2 was referred to 339 (the maximum energy).
ε_T , THE ERROR IN PERIOD, was referred to .2 seconds.

ALL READINGS MADE AT 5 SECONDS

PLATE II

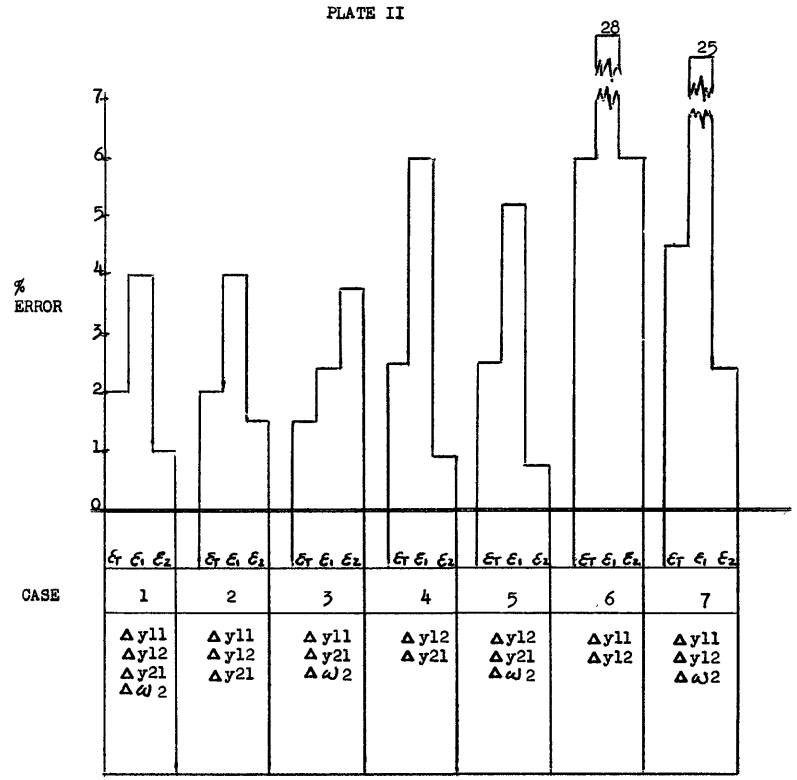

SEE PLATEII FOR AN EXPLANATION OF SYMBOLS

THESE READINGS REMAIN THE SAME FOR SEVERAL MINUTES