LETTER

IEICE Electronics Express, Vol.10, No.11, 1–6

A new type full digital UHF radar system design

Dapeng Jiang[1a)], Biyang Wen[1b)], Caijun Wang[1], Ke Li[1], Zhisheng Yan[2], and Jing Yang[1]

[1] *Electronic Information School, Wuhan University, Wuhan, Hubei Province, 430072, China*

[2] *Nanjing Research Institute of Electronics Technology, Nanjing, Jiangsu Province, China*

a) *jiangdapeng@whu.edu.cn*

b) *bywen@whu.edu.cn*

Abstract: A new type full digital ultra high frequency (UHF) radar system has been developed by Wuhan University to measure inshore wave. There is no analog mixer and local oscillator (LO) signal generator in the new system, Radio frequency (RF) is directly sampled, the pulse compression is fully completed in digital domain. The system operates at 340 MHz with a widely frequency modulated (FM) bandwidth of 15 MHz. Average transmit power is about 25 watts, and the maximum range over seawater will be more than 4 kilometers. The results of the field experiment on the coast of East China Sea presented here prove the feasibility of this system.

Keywords: full digital pulse compression, UHF radar, inshore wave, FMICW

Classification: Microwave and millimeter wave devices, circuits, and systems

References

[1] C. C. Teague, D. E. Barrick, P. M. Lilleboe, R. T. Cheng, P. Stumpner and J. R. Burau: IEEE/OES 9th Working Conference on Current Measurement Technology (CMTC) (2008) 258.

[2] D. E. Barrick, C. C. Teague and P. M. Lilleboe: U.S. Patent 7,688,251 B2 (2010).

[3] C. C. Teague, D. E. Barrick, P. M. Lilleboe, H. Roarty, D. Holden and D. Goldinger: 2011 IEEE/OES 10th, Current, Waves and Turbulence Measurements (CWTM) (2011) 78.

[4] Z. G. Ma, B. Y. Wen, H. Zhou, C. J. Wang and W. D. Yan: IEEE Microw. Wireless Compon. Lett. **15** [12] (2005) 904.

[5] W. Shen and B. Y. Wen: IET RADAR 2007, International Conference on Radar Systems, ISBN 978-0-86341-849-5 (2007).

[6] W. Shen, B. Y. Wen and F. Ding: 2009 Asia-Pacific Power and Energy Engieering Conference (2009).

[7] Z. S. Yan, B. Y. Wen, C. J. Wang and C. Zhang: IEICE Electron. Express **6** [11] (2009) 780.

[8] D. E. Barrick, B. J. Lipa, P. M. Lilleboe and J. Isaacson: U. S. Patent 5361072 (1994).

[9] D. D. Crombie: Nature **175** (1955) 681.

DOI: 10.1587/elex.10.20130249
Received April 08, 2013
Accepted April 25, 2013
Publicized May 21, 2013
Copyedited June 10, 2013

IEICE Electronics Express, Vol.10, No.11, 1–6

1 Introduction

Wave power is a form of renewable energy, and many researchers have focused on collecting the energy of inshore wave. However, the inshore wave environment is so complex that the equipments in this area are sometimes damaged by powerful waves. The monitoring of inshore wave is an essential issue to oceanic researchers.

Ocean buoy is one of the most popular measuring instrument and it is placed in water to get the parameters of wave by various sensors. However, this contact measurement method is limited by the high maintenance costs as well as the small scope. The high frequency (HF) ground wave radar is an ocean monitoring technology over the horizon, but its low range resolution is not suitable for inshore monitoring. The RiverSonde is an UHF surface currents radar system developed by the CODAR company, many field tests had been taken to measure river currents [1, 2, 3]. The UHF radar system designed by Wuhan University accomplished field experiment at Tangxun Lake in 2005, then the field test at Yangtze River and on the bench of East China Sea were conducted [4, 5, 6].

The HF and UHF radar system mentioned above rely on Bragg scattering and Doppler principle to measure surface current, which almost adopt intermediate frequency (IF) digital receiver system. A full digital UHF radar system with eight antennas has been designed by Wuhan University in 2012. There is no analog mixer and local oscillator (LO) signal generator in the system, the pulse compression is fully completed in digital domain. The system architecture is simple and practical, all modules work properly. The field test proved effectiveness of the radar system. This letter will introduce the system and the experiment.

2 Description of radar system

The radar system is different from conventional backscatter radar in architecture, analog mixer and local oscillator (LO) signal generator is not need in this system. Echo signal is directly digitized in A/D converter, then completed the pulse compression in digital domain. Fig. 1 shows the framework of the radar system.

The radar is a coherent system, of which all clock signals are from the same clock source. In Fig. 1, the DSPLL (Phase Locked Loop based on Digital Signal Processing) converts the clock source signal into three types reference clock needed by the radar system: (i) a 983.04 MHz clock signal that passes to Direct Digital Synthesizer (DDS) as reference clock; (ii) eight 81.92 MHz clock signals send to eight A/D Converters (ADC) as the sampling clock; (iii) a 81.92 MHz clock signal passes to Field Programmable Gates Array (FPGA) as synchronous controller clock and data processor clock.

In the radar system, various timing control signals and status signals are generated by FPGA. The chirp signal which corresponds to the waveform parameters is producted by DDS under the control of FPGA. After filtering and amplifying in the transmitter, the signal is emitted by Yagi antenna.

DOI: 10.1587/elex.10.20130249
Received April 08, 2013
Accepted April 25, 2013
Publicized May 21, 2013
Copyedited June 10, 2013

IEICE Electronics Express, Vol.10, No.11, 1–6

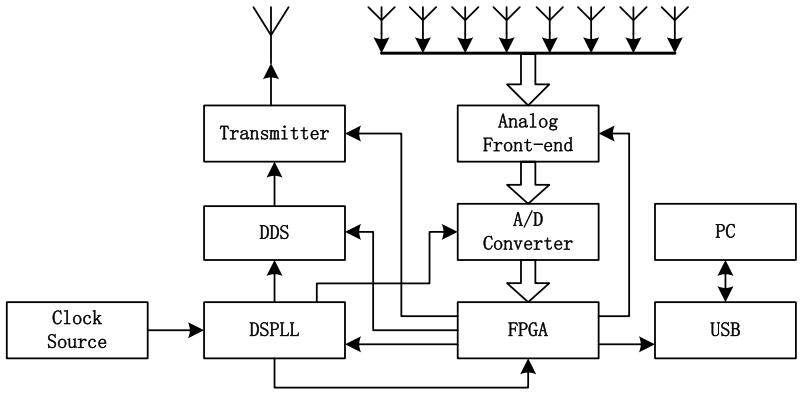

Fig. 1. Sketch of UHF radar system

The Radio Frequency (RF) echo is received by an 8-element linear Yagi antenna array. Each of the antennas has a 3 dB bandwidth of 45 deg. The polarization modes of the transmitting and receiving antennas are all vertically polarized. In the analog front-end module, signal of each channel is filtered and amplified, then directly sampled by ADC and sent to FPGA for further processing. The coordinate rotation digital computer (CORDIC) algorithm is used to realize dechirp and downconversion processing in FPGA [7].

CORDIC realizes rotating of a vector in a plane, and the vector coincides with a target position by decomposing the rotation into a sequence of elementary rotations with predefined angles. According this, the quadratic phase term of the echo can be cancelled, dechirp and direct digital downconversion can be easily accomplished once. Denote the positive frequency component of echo signal (with chirp slope K) in sampled version

$$s_r^+(n) = \exp(+j(2\pi f_c n - 2\pi f_c n_0 + \pi \mathrm{Kn}^2 + \pi K n_0^2 - 2\pi K n_0 n)) \tag{1}$$

Where f_c is the carrier frequency and n_0 is the delay, T (sample period) is absorbed into n and n_0.

The echo signal is rotated through the angle

$$\theta(n) = -2\pi f_c n - \pi K n^2 \tag{2}$$

After that, the echo signal is converted to a single tone (3) which corresponds to delay. The distance of target could be calculated by the delay.

$$\left\{ \begin{array}{c} I_{out}(n) \\ Q_{out}(n) \end{array} \right\} = \left\{ \begin{array}{c} \cos(-2\pi f_c n_0 + \pi K n_0^2 - 2\pi K n_0 n) \\ \sin(-2\pi f_c n_0 + \pi K n_0^2 - 2\pi K n_0 n) \end{array} \right\} \tag{3}$$

After dechirp and downconversion processing, the resulting data will be decimated by cascade integrator comb (CIC) filter to reduce the data rate. Then the data is sent to PC by universal serial bus (USB) for further processing. The information of range and velocity are extracted through double-FFT algorithm [8]. The first FFT was done over a swept period to obtain range information. Then the second FFT was done over several swept periods to obtain Doppler information. Fig. 2 presents the procedure of data processing.

DOI: 10.1587/elex.10.20130249
Received April 08, 2013
Accepted April 25, 2013
Publicized May 21, 2013
Copyedited June 10, 2013

IEICE Electronics Express, Vol.10, No.11, 1–6

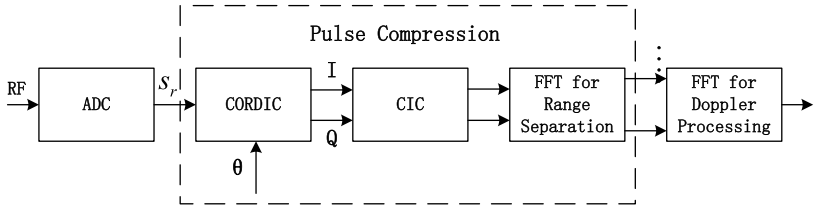

Fig. 2. Signal processing procedure

3 Waveform design

Frequency Modulated Interrupt Continuous Waveform (FMICW) is employed in the system. The radar operates at UHF (340 MHz) to match the expected water wavelengths of 0.44 m. It utilizes energy scattered by Bragg-resonant waves to get some kinds of parameters, such as wave height spectrum. Based on the theory of Crombie [9], the Bragg-resonant scattering frequency corresponds to 340 MHz will be 1.88 Hz. The Doppler bandwidth should be twice more than Bragg frequency and the maximum Doppler shift frequency. In order to avoid the range ambiguity, the pulse repetition frequency (PRF) should be more than the maximal frequency offset which corresponds to the echo in the maximal distance in the case of orthogonal transformation. In the system, a chirp waveform with 15 MHz bandwidth is used, resulting in a range resolution of 10 m. The sweep period is set to 0.04 seconds, so the sampling rate for Doppler frequency is 25 Hz, and it can be calculated that the maximal radial velocity is 5.5 meters per second, it is enough for measuring wave. The total range cell is set to 500, accordingly, the maximal frequency offset is 12.5 KHz. The sampling rate is 80 MHz and the PRF is 12.8 KHz, according the above analysis there is no range ambiguity. Coherent integration time continues 10.24 seconds which contains 256 sweep periods with the frequency resolution of 0.09765625 Hz, and the number of sweep periods can be configured even more to calculate more reliable wave energy estimation.

4 Simulation and field test result

A series of close-loop tests are conducted in the laboratory for debugging and calibrating the radar system. The RF signal could be delayed a special transmit time for simulating the echo of stationary target, the distance of target is determined by the delay time. The range and velocity information of simulation echo can be respectively extracted from the frequency spectrum of the first FFT algorithm and the second FFT algorithm. The simulation distance is set to 760 meters, and Doppler information is 0 Hz. Fig. 3 shows the results of simulation, the range and Doppler information are correct. The amplitude stability and phase stability are important parameters for coherent radar system. Fig. 4 shows the amplitude and phase changes during a coherent integration time. The variances in amplitude is from 146.223 dB to 146.2247 dB in less than 0.002 dB fluctuation and the variances in phase is from −76.17 deg to −76.125 deg in less than 0.05 deg fluctuation.

Field experiment of the radar system was conducted on the coast of

DOI: 10.1587/elex.10.20130249
Received April 08, 2013
Accepted April 25, 2013
Publicized May 21, 2013
Copyedited June 10, 2013

East China Sea during March 2013. Fig. 5 (a) shows the spectrum of range-Doppler of one channel. The covered range exceeds 4 kilometers, and strong backscattered echo was obtained. The positive and negative backscatter energy of seawater are clearly displayed, which respectively indicate the wave energy move towards and away from the radar. Due to the influence of wind, the positive and negative energy of echo are different. Fig. 5 (b) presents the Doppler spectrum of certain range. Bragg frequency in still water is marked

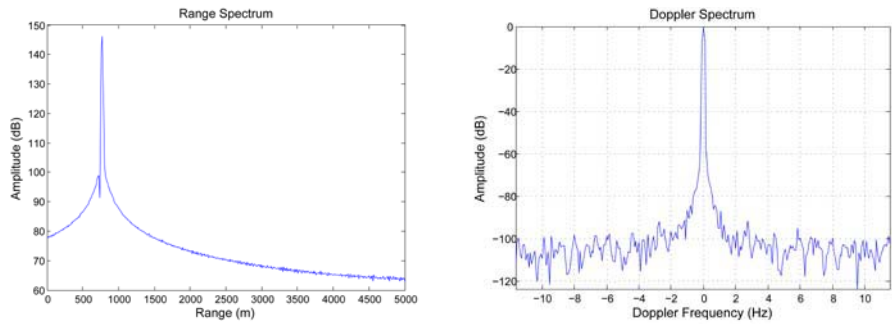

(a) **(b)**

Fig. 3. Results of simulation test: (a) Range spectrum of simulation; (b) Doppler spectrum of simulation

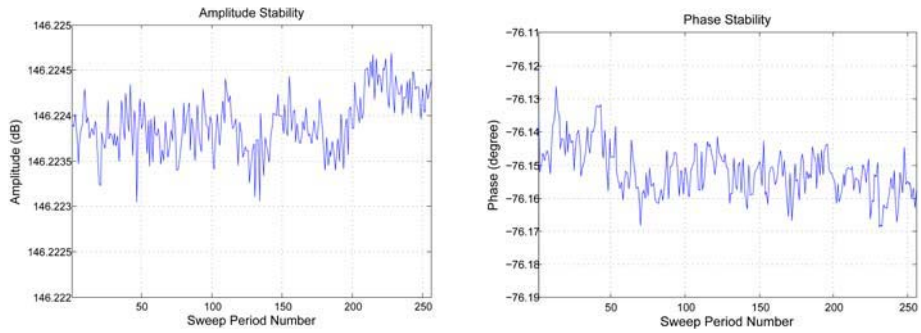

(a) **(b)**

Fig. 4. Results of stability test: (a) Amplitude stability; (b) Phase stability

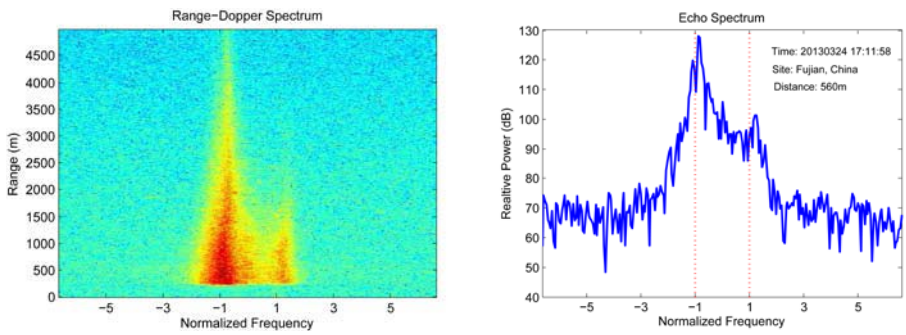

(a) **(b)**

Fig. 5. Results of field test: (a) Range Doppler spectrum; (b) Echo Doppler spectrum

DOI: 10.1587/elex.10.20130249
Received April 08, 2013
Accepted April 25, 2013
Publicized May 21, 2013
Copyedited June 10, 2013

out with dotted lines. The signal to noise ratio (SNR) of echo is about 60 dB. In Fig. 5 (b), it is difficult to distinguish the first order peaks and the second order peaks, they mixed together sometimes.

5 Conclusion

In this paper, the design of a new full digital UHF radar system is presented, and results of simulation and field experiment are shown. The structure of radar system is simple, and it worked well during the experiment. The maximum range is more than 4 kilometers with 25 watts of average transmitter power, and the strong echo was obtained. By further research, more field experiments such as surface current measuring of river could be conducted, it is significant to research the backscattering of UHF radio from fresh water and seawater.

Acknowledgments

This project is supported by the National Natural Science Foundation of China (Grant No. 61072086 and No. 61001186), Specialized Research Fund for the Doctoral Program of Higher Education under Grant 20090141120019. The authors wish to express their gratitude to the editor and the anonymous reviewers.

DOI: 10.1587/elex.10.20130249
Received April 08, 2013
Accepted April 25, 2013
Publicized May 21, 2013
Copyedited June 10, 2013