IEICE Electronics Express

LETTER

IEICE Electronics Express, Vol.13, No.2, 1–7

Baseband signal processing of digital phosphor technology with high accuracy

Jinguang Hao[1a)], Kai Wang[2], Wenjiang Pei[2], and Yili Xia[2]

[1] *School of Information and Electrical Engineering, Ludong University, Yantai, Shandong, 264025, P.R. China*

[2] *School of Information Science and Engineering, Southeast University, Nanjing, Jiangsu, 211189, P.R. China*

a) *Jinguang.hao@gmail.com*

Abstract: A high-accuracy baseband signal processing system of digital phosphor technology for real-time spectrum analysis is proposed based on fast filter bank (FFB). The modular instruments based platform is utilized to verify the performance of the proposed scheme implemented with field-programmable gate array (FPGA) module. With the single-tone signal as a test signal, the experimental results show that the proposed scheme can improve the accuracy of the real-time spectrum analysis at the cost of slightly higher complexity than that of fast Fourier transform (FFT) based scheme.

Keywords: fast filter bank (FFB), digital phosphor technology (DPX), real-time spectrum analysis, high accuracy

Classification: Electron devices, circuits, and systems

References

[1] Tektronix: DPX Acquisition Technology for Spectrum Analyzers Fundamentals Primer (2009).

[2] Rohde and Schwarz: Implementation of Real-Time Spectrum Analysis (2011).

[3] S. Guo, J. Su, G. Sun and Z. Zhao: IEICE Electron. Express **10** (2013) 20130657. DOI:10.1587/elex.10.20130657

[4] C. J. Kief, M. S. Pattichis, L. H. Pollard, G. A. Vera and J. E. Parra: Comput. Appl. Eng. Educ. **17** [2] (2009) 232. DOI:10.1002/cae.20192

[5] J. Palmer and B. Nelson: Lect. Notes Comput. Sci. **3203** (2004) 948. DOI: 10.1007/978-3-540-30117-2_105

[6] M. Ayinala, M. Brown and K. K. Parhi: IEEE Trans. Very Large Scale Integr. (VLSI) Syst. **20** (2012) 1068. DOI:10.1109/TVLSI.2011.2147338

[7] Y. C. Lim and B. Farhang-Boroujeny: IEEE Trans. Circuits Syst. II, Analog Digit. Signal Process. **39** (1992) 316. DOI:10.1109/82.142033

[8] F. C. Diniz, I. Kothe, S. L. Netto and L. W. Biscainho: EURASIP J. Appl. Signal Process. **1** (2007) 164. DOI:10.1155/2007/94704

[9] K. G. Smitha and A. P. Vinod: IEEE Trans. Very Large Scale Integr. (VLSI) Syst. **20** (2012) 1323. DOI:10.1109/TVLSI.2011.2151214

[10] S. J. Darak, S. K. P. Gopi, V. Prasad and E. K. Lai: IEEE Trans. Very Large Scale Integr. (VLSI) Syst. **22** (2014) 1202. DOI:10.1109/TVLSI.2013.2263813

DOI: 10.1587/elex.12.20150938
Received November 5, 2015
Accepted December 3, 2015
Publicized December 18, 2015
Copyedited January 25, 2016

[11] National Instruments Corporation: National Instruments products http://www.ni.com/modularinstruments/.
[12] Y. C. Lim and B. Farhang-Boroujeny: ISCAS (1994) 509. DOI:10.1109/ISCAS.1994.409037

1 Introduction

In modern spectrum analyzers, digital phosphor technology (DPX) is a promising technology and plays an important role, which illustrates spectrum with a spectrum image indicating the frequency, amplitude, and "hit count" [1, 2, 3, 4, 5, 6]. In most of implementations, the baseband signal processing is achieved on the basis of fast Fourier transform (FFT) due to direct conversion between the time and frequency domains with low complexity of one complex multiplication per channel per sample [3, 4, 5, 6, 7]. However, the poor passband response of FFT leads to spectral leakage with about −13 dB of the peak of the first side-lobe. As the most important component of DPX system for real-time spectrum analyzer in [3, 4, 5, 6], FFT will affect the accuracy of the spectrum analysis. To alleviate the problem, a fast filter bank (FFB) based baseband signal processing system is proposed for real-time spectrum analyzer, and the FPGA-implementation of the proposed scheme on the modular instruments platform is utilized to compare the performance between the proposed scheme and the FFT based scheme.

2 Fast filter bank (FFB)

FFB was first introduced in [7] as a generalized sliding FFT to improve the frequency response performance with a cascaded structure. This class of filter bank has better frequency response such as high attenuation, narrow transition bandwidth at the cost of slightly higher complexity than that of FFT. Due to these advantages, it is widely used in music signal processing, cognitive radio, multi-standard receiver, and so on [8, 9, 10]. For a L-stage FFB, it can realize $N = 2^L$ channels. The typical cascaded structure is shown in Fig. 1, where $N = 8$ and $L = 3$.

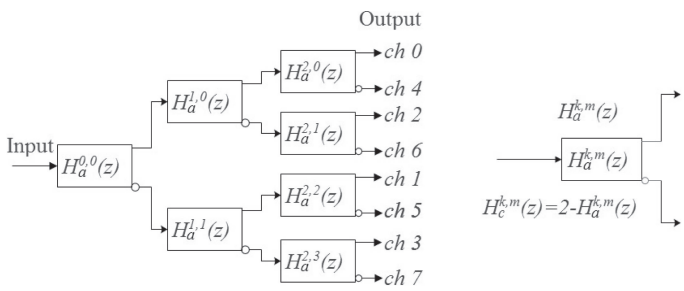

Fig. 1. Structure of FFB

At the kth stage, each subfilter is the modulated version of the prototype filter $H_a^k(z)$ with two outputs. The upper-path output is term as the primary output with the transfer function $H_a^{k,m}(z) = H_a^k(W_N^{\overline{m}} z^{L-1-k})$, where $\overline{m}$ is the bit reversed version of m in $L-1$ bits and $W_N = e^{-j2\pi/N}$. The lower-path output is termed as the complementary output with the transfer function $H_c^{k,m}(z) = 2 - H_a^{k,m}(z)$.

DOI: 10.1587/elex.12.20150938
Received November 5, 2015
Accepted December 3, 2015
Publicized December 18, 2015
Copyedited January 25, 2016

IEICE Electronics Express, Vol.13, No.2, 1–7

3 Proposed baseband signal processing system

3.1 Proposed system

The proposed block diagram of DPX system based on modular instruments is shown in Fig. 2.

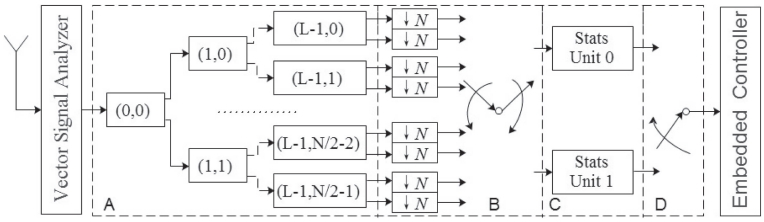

Fig. 2. Block diagram of DPX system based on FFB

The radio signals are converted into complex-valued baseband signals with in-phase (I) and quadrature (Q) components by vector signal analyzer (VSA) on the modular instruments. In the following, I/Q components are processed by the proposed baseband signal processing unit, and the spectrum image data of DPX system generated by the baseband signal processing unit are transferred to the embedded controller to display the spectrum image through peripheral component interconnection extensions for instrumentation (PXIe) bus.

This paper focuses on the design of the baseband signal processing unit in Fig. 2 and the FPGA-implementation. The unit is composed of four blocks marked by A, B, C, and D. Block A is the cascaded-structured FFB, which decomposes the baseband signals from VSA into N channels in the frequency domain uniformly. Block B transfers the complex values with channel numbers to the next block alternatively. Block C is composed of two identical statistics units, which can generate the spectrum image data by analyzing the input complex values and transfer the spectrum image data to the embedded system. Two identical statistics units perform different functions, that is, one generates the spectrum image data, while the other transfers the image data to the embedded controller through PXIe bus in the block D. In such manner, the input complex values could not be ignored during the data transmission to the embedded controller so that the short-time signals can be detected. In the embedded controller, the image data from the baseband signal processing unit is displayed and one can observe the real-time spectrum intuitively.

In the subsequent subsections, the FPGA-implementations of subfilters within FFB in the block A and a statistics unit in the block C are discussed in detail.

3.2 Structure of subfilters

In the block A, the subfilters of FFB have similar structures with one input and two outputs. Considering the relationship of the transfer functions of two outputs with $H_a^{k,m}(z) + H_c^{k,m}(z) = 2$, we design the subfilters with the complementary structure shown in Fig. 3. In this manner, the number of multiplications of each subfilter can be reduced about 50%. When the subfilters are designed with halfband method, the

DOI: 10.1587/elex.12.20150938
Received November 5, 2015
Accepted December 3, 2015
Publicized December 18, 2015
Copyedited January 25, 2016

IEICE Electronics Express, Vol.13, No.2, 1–7

required multiplications can be reduced further. The factor p is the time delay factor. For the kth stage, p equals 2^{L-1-k}, where $k = 0, 1, \ldots, L-1$. The ports "D_{out}_a" and "D_{out}_c" represent the primary output in the upper path and the complementary output in the lower path referring to Fig. 1.

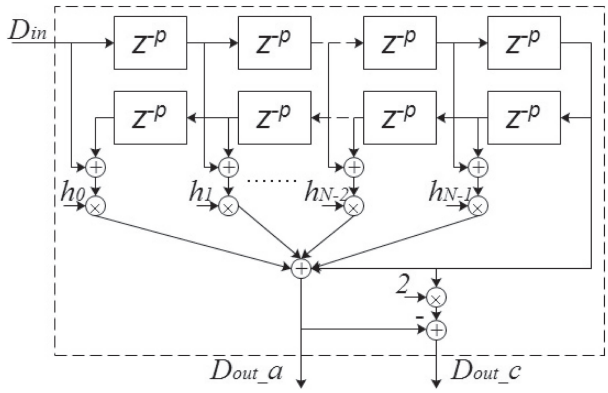

Fig. 3. Structure of subfilters

3.3 Structure of statistics unit

A statistics unit in the block C performs two different functions, that is, generating the spectrum image data by analyzing the input complex values with channel numbers and transferring the image data to the embedded controller. To do this, the proposed structure of the statistics unit is shown in Fig. 4.

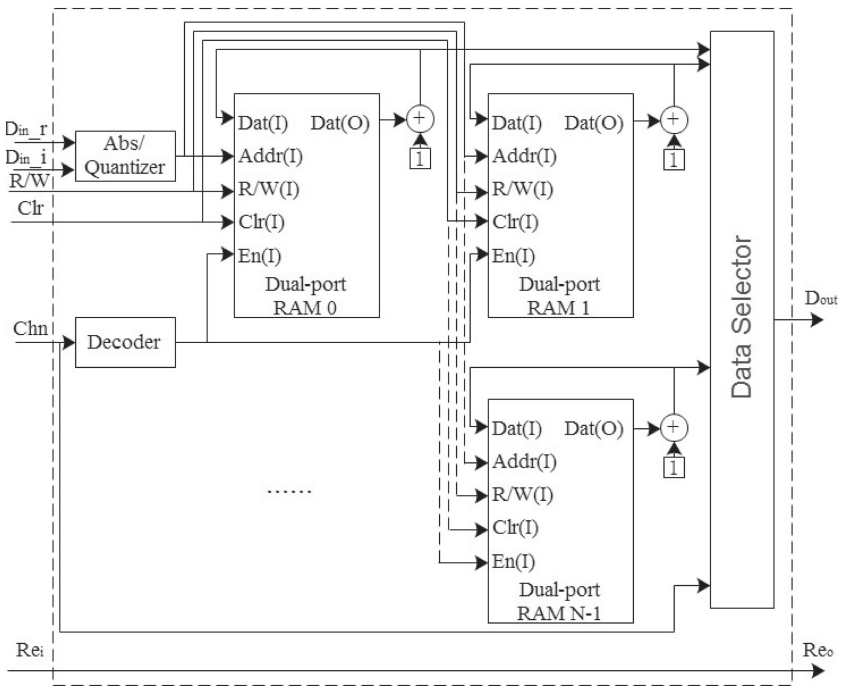

Fig. 4. Structure of the statistics unit

The structure is implemented based on dual-port random-access memory (RAMs). The RAM labeled by q ($q = 0, \ldots, N-1$) represents the qth column of

DOI: 10.1587/elex.12.20150938
Received November 5, 2015
Accepted December 3, 2015
Publicized December 18, 2015
Copyedited January 25, 2016

the spectrum image, which can be chosen by the decoder of the channel number related to the frequency of the input signals. The quantized value of the amplitude of the input complex values (D_{in}_r and D_{in}_i) is treated as the address of the corresponding RAM so that the chosen cell in the RAM according to the desired address can perform add-one operation and the "hit count" of the chosen cell can be determined with the frequency and amplitude accordingly. Two different functions of the statistics unit can be determined by the status of the port "R/W". Specifically, the statistics unit performs the function of generating spectrum image data when the port keeps "W" status, otherwise the unit performs the different function of transferring the image data to the embedded controller.

4 Experimental results

In this section, an experiment is conducted to compare the performances between the proposed scheme and the FFT based scheme. For a fair comparison, the FFT based scheme is slightly modified the proposed structure in Fig. 2 by replacing FFB in the block A with FFT. In the experiment, we design the number of the channels in the DPX system $N = 128$ and the test signal is the single-tone signal.

4.1 Experimental platform

The platform is based on the modular instruments provided by National Instruments (NI) shown in Fig. 5, which consists of embedded controller (PXIe8133), FPGA module (PXIe7966R), vector signal generator (VSG) (PXIe5673) and VSA (PXIe5663) [11]. The test signal is transmitted from VSG, which up-converts the test signal into the radio signal with the carrier frequency 2.412 GHz, and the radio signal is connected to the input of VSA directly, whose carrier frequency is also set to 2.412 GHz. After the down-conversion of the radio signal by VSA, the baseband signal is processed with FPGA implementation of the proposed scheme. The generated spectrum image data are transferred to embedded controller. At the receiver side, the data process is in accordance with that in Fig. 2.

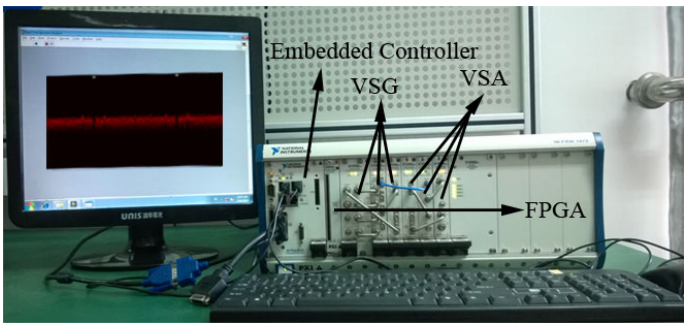

Fig. 5. Experimental platform of the proposed scheme

4.2 Design of prototype filters

The overall specifications for FFB in the block A are given as follows: the passband edge frequency $0.4\pi/N$, the passband ripple 0.1 dB, the stopband edge frequency $0.6\pi/N$, and the stopband ripple −40 dB. In order to reduce the complexity of FFB,

DOI: 10.1587/elex.12.20150938
Received November 5, 2015
Accepted December 3, 2015
Publicized December 18, 2015
Copyedited January 25, 2016

the halfband method is utilized to design the prototype filters. With the original method [12], nonzero impulse response coefficients of the prototype filters are listed in Table I. The number of multiplications per channel per sample can be computed in Eq. (1), that is, the number of multiplications required by FFB is about 1.07 times of that of FFT.

Table I. Impulse response of prototype filters for $h_a^k(n)$

n	$h_a^0(n)$	$h_a^1(n)$	$h_a^2(n)$	$h_a^3(n)$	$h_a^4(n)$	$h_a^5(n)$	$h_a^6(n)$
0	1.0000	1.0000	1.0000	1.0000	1.0000	1.0000	1.0000
±1	0.6267	0.5820	0.5717	0.5012	0.5008	0.5006	0.5001
±3	−0.1839	−0.0870	−0.0727				
±5	0.0844						
±7	−0.0388						
±9	0.0166						

$$M = (5 \times 1 + 2 \times 2 + 2 \times 4 + 1 \times 8 + 1 \times 16 + 1 \times 32 + 1 \times 64)/128 = 1.07 \quad (1)$$

4.3 Performance comparison

For the purpose of the performance comparison for the real-time spectrum analysis, a real single-tone signal is chosen as the test signal. It is known that the spectrum is a symmetrical Dirac's delta function analyzed by FFT when the input signal is a real single-tone signal and the sampling points for FFT contain an integer number of periods. When the sampling points for FFT do not contain an integer number of periods or the frequency of the test signal lies between frequency bins, spectral leakage occurs, which results in false frequency components. Specifically, when the normalized frequency of the test signal $f_0 = (q + \Delta q) \cdot 2\pi/N$ for $\Delta q \neq 0$ and $q = 0, \pm 1, \pm 2, \ldots$, the spectral leakage arises using FFT in the real-time spectrum analysis leading to spectrum accuracy-decreasing. In this condition, the proposed scheme can alleviate the problem efficiently due to the above advantages of FFB.

In this experiment, the real single-tone signal $x(n)$ is defined as:

$$x(n) = \cos(2\pi \cdot f_0 \cdot n) + w(n) \quad (2)$$

where the normalized frequency of the test signal f_0 is chosen as $f_0 = 30.3/N$ in the experiment, and $w(n)$ is additive white Gaussian noise (AWGN) with signal-noise ratio (SNR) 30 dB.

The spectrum images of DPX system analyzed with the proposed scheme and FFT based scheme are illustrated in Fig. 6(a) and (b). From Fig. 6(a), it can be seen that the spectrum image obtained by the proposed scheme is accordance with the spectrum in theory, that is, for a real single-tone signal, the spectrum is the Dirac's delta function and symmetrical about the normalized frequency 0. As a comparison, from Fig. 6(b), it can be observed that the false spectrum components appear due to the inherent disadvantages of FFT, which decrease the accuracy of the real-time spectrum analysis.

DOI: 10.1587/elex.12.20150938
Received November 5, 2015
Accepted December 3, 2015
Publicized December 18, 2015
Copyedited January 25, 2016

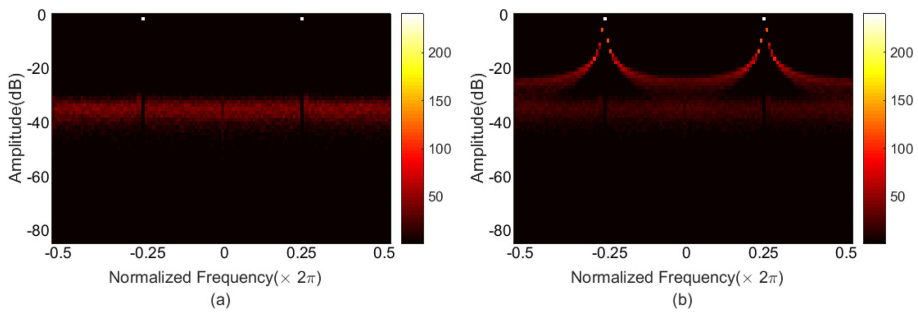

Fig. 6. Performance comparison

5 Conclusions

A FFB based baseband signal processing system of DPX system is proposed in this paper. The system is composed of four blocks, that is, FFB based spectrum analysis block, data decimation block, statistics units block and spectrum image data transmission block. The experimental platform based on modular instruments is utilized to verify the performance of the proposed scheme implemented with FPGA module. The single-tone signal, whose normalized frequency lies between frequency bins, as a test signal passes through the proposed DPX system and generates the spectrum image. The comparison of spectrum image analyzed by the proposed scheme and the FFT based scheme shows that the proposed scheme can obtain more accurate spectrum image at the cost of slightly higher complexity due to its better frequency response such as high attenuation, narrow transition bandwidth, low complexity, and so on.

Acknowledgments

This work was supported by the National Natural Science Foundation of China (Grant No. 61201173, 61271058, 61401094), the Specialized Research Fund for the Doctoral Program of Higher Education of China (Grant No. 20110092110008), the Natural Science Foundation of Jiangsu Province (Grant No. SBK201140040, BK2011060, BK20140645).

DOI: 10.1587/elex.12.20150938
Received November 5, 2015
Accepted December 3, 2015
Publicized December 18, 2015
Copyedited January 25, 2016