IEICE Electronics Express, Vol.13, No.12, 1–6

LETTER

Switching power supply circuit with voltage-drop compensation for AMOLED displays

Hyun-Sik Kim[a)] **and Kwan-Young Han**[b)]

Department of Display Engineering, Dankook University,

119 Dandae-ro, Dongnam-gu, Cheonan-si, Chungnam, 31116, South Korea

a) *hs.kim@dankook.ac.kr*

b) *kyhan@dankook.ac.kr*

Abstract: A power supply circuit that compensates for the voltage drop in the large-sized AMOLED display panel is presented. The voltage drop, which degrades luminance uniformity, is directly detected, and the detected value is then fed back to the controller circuit to adaptively adjust the power supply voltage in order to minimize the voltage drop. The validity of the proposed technique was verified by experimental results; the two-fold improvement was achieved in terms of the measured voltage drop. As a result, the measured luminance uniformity was also significantly enhanced.

Keywords: OLED display, switch-mode power supply (SMPS), voltage drop, DC-DC converter, feedback circuit, supply power distribution

Classification: Energy harvesting devices, circuits and modules

References

[1] M.-H. Jung, O. Kim and H.-J. Chung: J. Korean Phys. Soc. **48** (2006) S5. DOI:10.3938/jkps.48.5

[2] Y. W. Kim, W. K. Kwak, J. Y. Lee, W. S. Choi, K. Y. Lee, S. C. Kim and E. J. Yoo: SID Tech. Dig. (2009) 87. DOI:10.1889/1.3256930

[3] S. P. Hong, D. S. Moon and B. S. Bae: Analog Integr. Circ. Sig. Process **70** (2012) 157. DOI:10.1007/s10470-011-9706-6

[4] S.-Y. Lee, S.-H. Kuk, S.-M. Song, M.-K. Song and M.-K. Han: ECS Trans. **50** (2013) 269. DOI:10.1149/05008.0269ecst

[5] J.-P. Lee, H.-S. Jeon, D.-S. Moon and B.-S. Bae: IEEE Electron Device Lett. **35** (2014) 72. DOI:10.1109/LED.2013.2289315

[6] C.-L. Lin, W.-Y. Chang, C.-C. Hung and C.-D. Tu: IEEE Electron Device Lett. **33** (2012) 700. DOI:10.1109/LED.2012.2188270

[7] H.-J. In, K.-H. Oh, I. Lee, D.-H. Ryu, S.-M. Choi, K.-N. Kim, H.-D. Kim and O.-K. Kwon: IEEE Trans. Electron Devices **57** (2010) 3012. DOI:10.1109/TED.2010.2067750

[8] K.-Y. Lee, Y.-P. Hsu, P. Chao and W.-D. Chen: J. Display Technol. **10** (2014) 189. DOI:10.1109/JDT.2013.2292555

[9] J.-S. Bang, H.-S. Kim, S.-H. Park, K.-D. Kim, S.-W. Choi, O.-J. Kwon and G.-H. Cho: SOVC Tech. Dig. (2015) C326.

DOI: 10.1587/elex.13.20151076
Received December 16, 2015
Accepted April 4, 2016
Publicized April 18, 2016
Copyedited June 25, 2016

[10] K. Inukai, H. Kimura, M. Mizukami, J. Maruyama, S. Murakami, J. Koyama, T. Konuma and S. Yamazaki: SID Tech. Dig. (2000) 924. DOI:10.1889/1.1833106

1 Introduction

In recent years, the AMOLED technology has attracted considerable attention as a very desirable display. However, as large-sized and high-resolution AMOLED displays such as Full-HD (1920 × 1080) and Ultra-HD (3840 × 2160) have come into wider use for TV applications, the voltage (IR drop) by pixel currents of the supply voltage to the OLED on the panel becomes a critical issue [1, 2]. Due to the finite conductance of fabricated metal lines, the pixel currents flowing through the parasitic resistances on the power supply lines cause voltage drops, which can limit the uniform gray-level operation and deteriorate long-range uniformity.

Recent papers have reported a variety of attempts to effectively compensate for voltage drop. However, the compensation pixel circuits [2, 3, 4, 5, 6] are generally somewhat more complicated than the conventional pixel circuits composed of two transistors and one capacitor (2T-1C), resulting in the reduction of aperture ratio. Moreover, the external compensation techniques [7, 8, 9] require highly complex hardware, which could lead to higher costs. Furthermore, their compensation techniques are difficult to be adopted in digitally driven OLED panels [10].

In this paper, a new power supply circuit with voltage-drop compensation for large-sized high-resolution AMOLED displays is proposed. Compared with the previous approaches, the voltage-drop compensation is performed in a proposed step-down DC-DC converter circuit with an additional feedback loop which adaptively adjusts the output supply voltage by sensing the average value of total voltage drops on the panel. Since revision of the pixel circuit is not required, a high aperture ratio (2T-1C pixel) can be maintained, and the proposed scheme is also highly compatible even with the digital-driven panels.

2 Supply voltage distributions

An equivalent power supply circuit model of an AMOLED panel with a 2T-1C pixel structure is illustrated in Fig. 1. As shown in Fig. 1, the OLED is driven by the pixel current I_{EL} generated by the potential difference between the gate and the source V_{GS} of the driving thin-film transistor (TFT), given by $|V_{\mathrm{Data}} - V_{\mathrm{DD}}|$. However, the driving current that passes through the supply power causes a voltage drop due to the parasitic resistance R_{P} of the power line. Therefore, the V_{GS} in each driving TFT varies from pixel to pixel along the supplied voltage $V_{\mathrm{DD},x\mathrm{M}}$, generating various I_{EL}. This phenomenon causes non-uniform luminance from the top to the bottom of the panel. The power supply voltage V_{DD} (source of each driving TFT) of the pixel can be modeled as:

$$V_{DD,nM} = ELV_{DD} - \sum_{m=1}^{n}\left(R_P \cdot \sum_{k=m}^{N} I_{EL,kM}\right), \tag{1}$$

DOI: 10.1587/elex.13.20151076
Received December 16, 2015
Accepted April 4, 2016
Publicized April 18, 2016
Copyedited June 25, 2016

IEICE Electronics Express, Vol.13, No.12, 1–6

where N and n are the total number of vertical pixel rows and the vertical pixel position, respectively. Thus, the error current $\Delta I_{\mathrm{EL,nM}}$ of the n-th row pixel owing to the voltage drop can be approximated as:

$$\Delta I_{EL,nM} = I_{EL,Ideal} - I_{EL,nM} \simeq \frac{1}{2}\mu C_{ox}\left(\frac{W}{L}\right)_{DTFT}\left[\sum_{m=1}^{n}\left(R_P \cdot \sum_{k=m}^{N} I_{\mathrm{EL},kM}\right)\right]^2, \quad (2)$$

where μ, C_{ox}, and $(W/L)_{\mathrm{DTFT}}$ are the mobility, oxide capacitance, and aspect ratio of driving TFT, respectively. Note that electrical variations of DTFTs such as threshold voltage V_{th} and mobility μ shifts are not considered in Eq. (2).

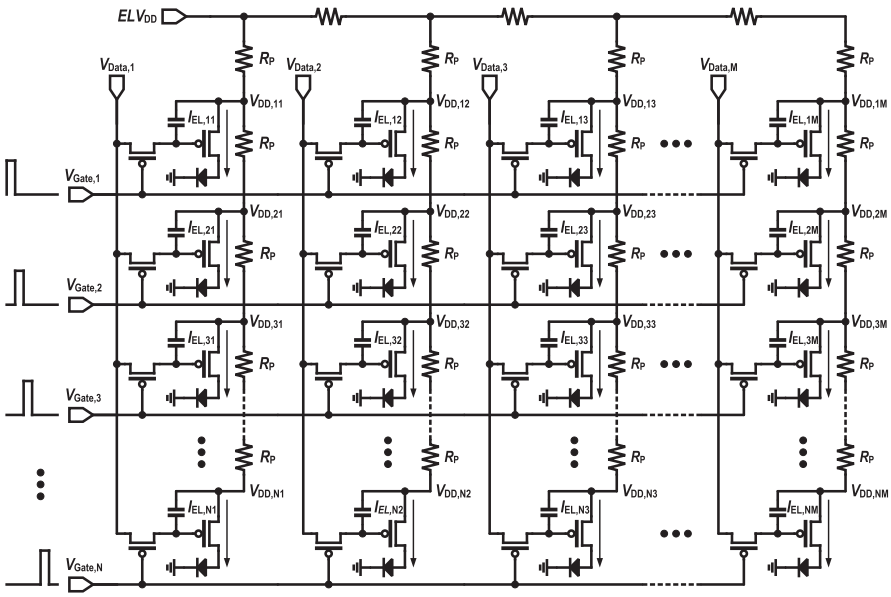

Fig. 1. Equivalent power supply circuit model of AMOLED panel.

Fig. 2 shows the simulation data of the supply-voltage V_{DD} distributions for a 55-inch Full-HD (1920 × 1080) 2T-1C AMOLED panel. In this simulation, it was assumed that $R_{\mathrm{P}} = 9.26\,\Omega$ (total resistance on single power line = 10 kΩ), typical $I_{\mathrm{EL,Ideal}} = 100\,\mathrm{nA}$, typical $ELV_{\mathrm{DD}} = 6\,\mathrm{V}$, $\mu C_{ox}(W/L)_{\mathrm{DTFT}} = 200\,\mu\mathrm{A/V^2}$, and $V_{\mathrm{th,TFT}} = 5\,\mathrm{V}$. In the single-bank (left of Fig. 2), ELV_{DD} is supplied only from the top side of the panel. The middle of Fig. 2 shows the result of the dual-bank structure in which ELV_{DD} is supplied to both sides of the panel. The center-supplied ELV_{DD} structure (right of Fig. 2) provides the supply-voltage ELV_{DD} to the center of the panel.

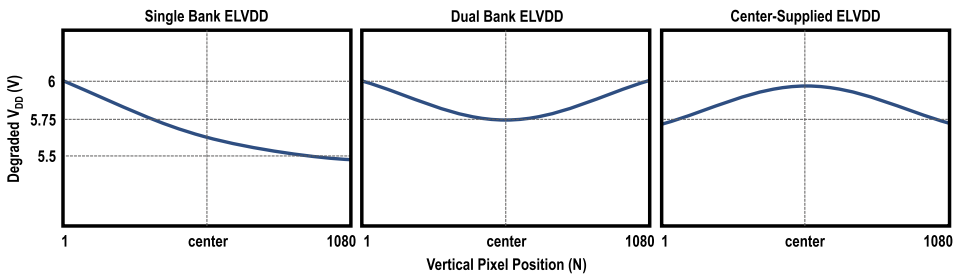

Fig. 2. Simulated supply-voltage V_{DD} distributions for Full-HD AMOLED panel with single-bank ELV_{DD}, dual-bank ELV_{DD}, and center-supplied ELV_{DD}.

DOI: 10.1587/elex.13.20151076
Received December 16, 2015
Accepted April 4, 2016
Publicized April 18, 2016
Copyedited June 25, 2016

IEICE Electronics Express, Vol.13, No.12, 1–6

3 Switching power supply with voltage-drop compensation

Power ELV_{DD} for driving AMOLED panel is generally supplied from a switch-mode power supply (SMPS) circuitry. The SMPS circuit converts the input power (typical DC level = 12 V) into the desirable output voltage ELV_{DD} (5–7 V); thus, a step-down buck converting circuit is required. In the voltage-mode control, a resistor divider network placed on the output node is used to feed back a portion (P_1) of the output voltage (ELV_{DD}) to the inverting terminal of the error-amplifier. This voltage is compared to the internal reference voltage (V_{REF}); during steady-state regulation, the error-amplifier output (V_{CTRL}) will not go below the voltage required to maintain the feedback voltage equal to V_{REF}. Therefore, the output voltage will be V_{OUT} $(= ELV_{DD}) = 1/P_1 \cdot V_{REF}$.

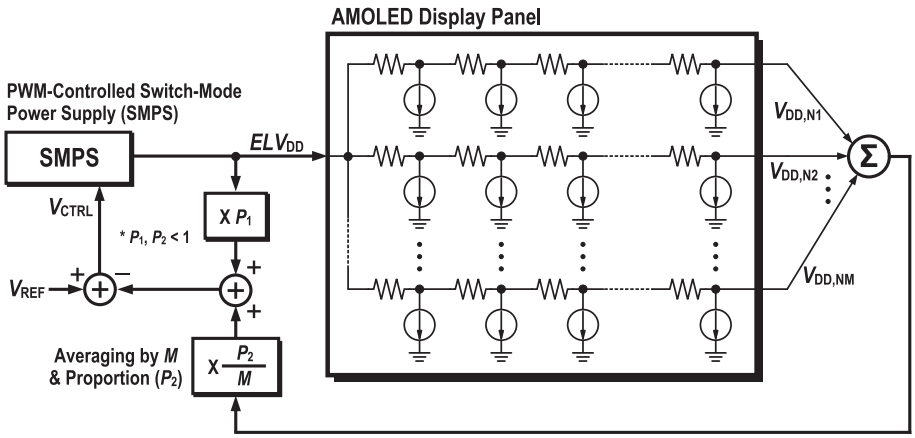

Fig. 3. Concept of proposed voltage-drop compensation technique.

The concept of the proposed voltage-drop compensation is an addition of the supplementary feedback loop in the power supply circuit for the decreased supply voltages ($V_{DD,Nx}$), which are sensed at the bottom of the AMOLED display panel, as depicted in Fig. 3. The presented circuit detects $V_{DD,N1}, V_{DD,N2}, \ldots, V_{DD,NM}$, which are the most dropped voltage of each power supply line at the edge of the panel, and calculates their average value. A portion (P_2) of the averaged value is then additionally fed to the error-amplifier of the power supply circuit in order to adjust the output voltage ELV_{DD}, adaptively. Therefore, the error-amplifier output V_{CTRL} can be expressed as:

$$V_{CTRL} = V_{REF} - P_1 \cdot ELV_{DD} - P_2 \cdot \frac{1}{M}\sum_{k=1}^{M} V_{DD,Nk}. \tag{3}$$

Due to stabilization mechanism of the double-loop negative feedback of Fig. 3, the value of V_{CTRL} reaches close to zero. When a sudden increase of the OLED currents (I_{EL}) in the panel occurs by increasing the overall brightness, the non-uniformity of luminance is supposed to be intensified as the IR-drop voltage (ΔV_{DD}) increases, from Eq. (1). In this situation, however, the variation of $V_{DD,Nx}$ appearing at the edge of the panel can be effectively reduced to $[P_1/(P_1 + P_2)] \cdot \Delta V_{DD}$, by virtue of the proposed double-loop feedback operation.

DOI: 10.1587/elex.13.20151076
Received December 16, 2015
Accepted April 4, 2016
Publicized April 18, 2016
Copyedited June 25, 2016

IEICE Electronics Express, Vol.13, No.12, 1–6

4 Experimental results

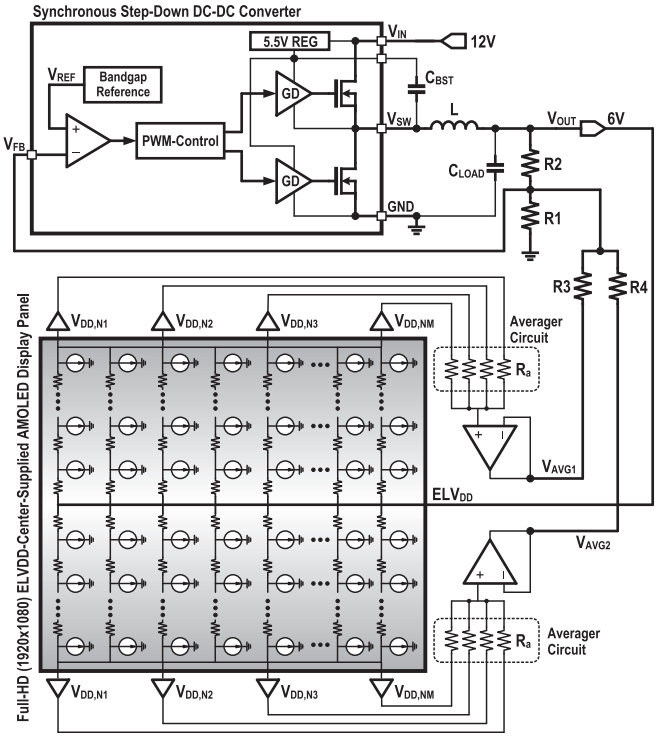

Fig. 4. Configuration of proposed switching power supply circuit for AMOLED display with voltage-drop compensation.

To verify the validity, the proposed switching power supply circuitry is designed in conjunction with a synchronous DC-DC buck converter chip and a Full-HD AMOLED panel with a center-driven ELV_{DD} structure, as described in Fig. 4. The step-down converter is controlled by pulse width modulation (PWM) and operates at a fixed switching frequency of 0.65 MHz. The voltage-drops are sensed at the top and bottom of the panel and then averaged by averager circuits (V_{AVG1} and V_{AVG2}). The feedback portions (P_1 and P_2) can be reconfigured by controlling the resistor values $R_1 - R_4$. Table I shows the detailed design parameters for the implementation of the proposed switching power supply circuitry shown in Fig. 4.

Table I. Implementation of key parameters

Parameters	Value
Input voltage V_{IN}	12 V
Output voltage V_{OUT} (= ELV_{DD})	6.5 V
Switching frequency	650 kHz
Inductor L	3.3 µH
Load capacitor C_{LOAD}	50 µF
Bootstrap capacitor C_{BST}	0.1 µF
Band-gap reference (BGR) V_{REF}	0.765 V
Feedback resistor R_1	22.1 kΩ
Feedback resistor R_2	367 kΩ
Feedback resistor R_3, R_4	600 kΩ
Target display panel	ELV_{DD}-center-supplied digital-driven Full-HD AMOLED

DOI: 10.1587/elex.13.20151076
Received December 16, 2015
Accepted April 4, 2016
Publicized April 18, 2016
Copyedited June 25, 2016

IEICE Electronics Express, Vol.13, No.12, 1–6

Fig. 5 shows the measured key waveforms ($V_{DD,Nx}$) when the uniform display with a certain gray-level is driven. The voltage-drop caused by the OLED currents was measured to be Δ515 mV in conventional configuration. However, with the proposed technique, it can be clearly observed that the voltage-drop was reduced to Δ260 mV (two-fold improvement) since the ELV_{DD} was adaptively adjusted by an additional feedback loop. Fig. 6 shows the measurement result of luminance uniformity. In the case of conventional driving, the luminance varies from pixel to pixel, as shown in Fig. 2. Meanwhile, the luminance with the proposed method is highly uniform regardless of the pixel position owing to the adaptive adjustment.

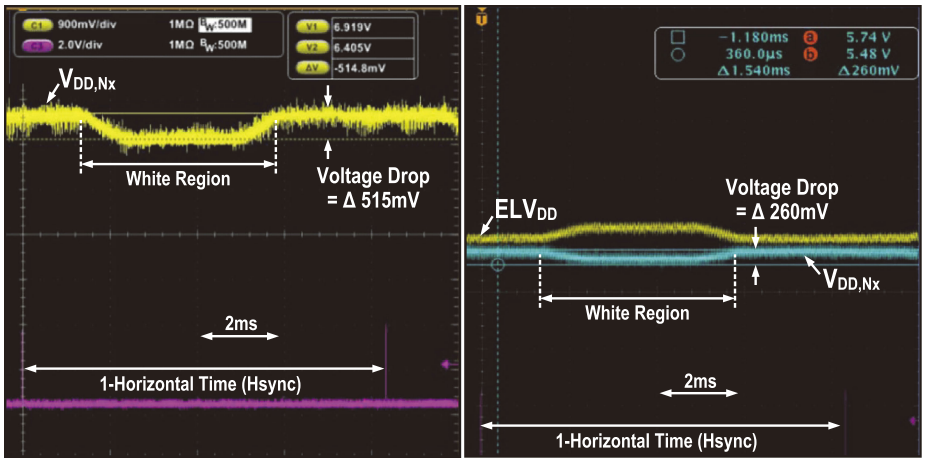

Fig. 5. Measured key waveforms without (left) and with (right) proposed additional feedback loop.

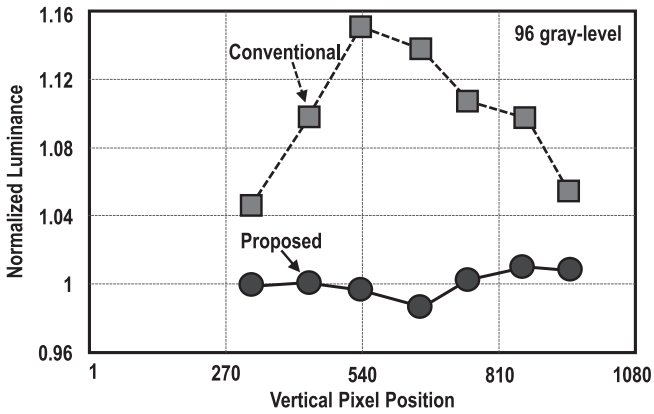

Fig. 6. Measured luminance uniformity.

5 Conclusion

In this paper, a new power supply circuit with voltage-drop compensation was presented. The voltage-drop is compensated by a proposed step-down converter with an additional feedback loop that adjusts the ELV_{DD} by sensing the averaged value of voltage drops on the panel. According to the experimental results, the luminance uniformity can be significantly improved by using the proposed power supply circuit. In addition, the circuit is compatible with all types of OLED panels. Thus, the proposed technique is highly applicable for high-resolution OLED TVs.

DOI: 10.1587/elex.13.20151076
Received December 16, 2015
Accepted April 4, 2016
Publicized April 18, 2016
Copyedited June 25, 2016