IEICE Electronics Express, Vol.6, No.15, 1071–1076

High recording density hard disk channel equalization using a bilinear recursive polynomial model

Sooyong Choi[1a)], **Gyuyeol Kong**[1], **Hyunmin Cho**[1], **Jaejin Lee**[2], **and Joohyun Lee**[3]

[1] *School of Electrical and Electronic Engineering, Yonsei University, 134 Shinchon-Dong, Seodaemun-Gu, SEOUL, 120–749, KOREA*

[2] *School of Electronic Engineering, Soongsil University, Seoul, Korea*

[3] *Storage System Division, Samsung Electronics, Suwon, Korea*

a) *csyong@yonsei.ac.kr*

Abstract: In order to improve the performance and simplify the structure of the conventional detectors in high density magnetic channels, a new equalizer based on bilinear recursive polynomial models, which uses the previously estimated sequence, is proposed. The performance is compared with the conventional equalizers and the maximum likelihood sequential detection bound. The simulation results show that as the normalized recording density becomes higher the proposed equalizer with much simpler structures shows the similar or better performances compared to the partial response maximum likelihood methods and the proposed equalizer is robust to the jitter noise.

Keywords: bilinear recursive polynomial, equalizer, partial response maximum likelihood, perpendicular magnetic recording

Classification: Storage technology

References

[1] S. Haykin, *Adaptive Filter Theory*, Prentice-Hall, Upper Saddle River, New Jersey, 2002.

[2] V. J. Mathews and G. L. Sicuranza, *Polynomial Signal Processing*, John Wiley & Sons, New York, 2001.

[3] Z. Xiang, G. Bi, and T. Le-Ngoc, "Polynomial Perceptrons and Their Applications to Fading Channel Equalization and Co-Channel Interference Suppression," *IEEE Trans. Signal Process.*, vol. 42, no. 9, pp. 2470–2479, Sept. 1994.

[4] S. Chen, G. J. Gibson, and C. F. N. Cowan, "Adaptive channel equalisation using a polynomial-perceptron structure," *Proc. IEE*, pt. 1, vol. 137, no. 5, pp. 257–264, Oct. 1990.

[5] M. Madden, M. Oberg, Z. Wu, and R. He, "Read channel for perpendicular magnetic recording," *IEEE Trans. Magn.*, no. 1, pp. 241–246, Jan. 2004.

[6] J. Lee and J. Lee, "A simplified noise-predictive partial response maximum likelihood detection using M-algorithm for perpendicular magnetic

DOI: 10.1587/elex.6.1071
Received January 23, 2009
Accepted July 08, 2009
Published August 10, 2009

recording channels," *IEEE Trans. Magn.*, vol. 41, no. 2, pp. 1064–1066, Feb. 2005.

[7] G. Y. Okamoto, H. Sumiyoshi, T. Kishigami, M. Akamatsu, H. Osawa, H. Saito, H. Muraoka, and Y. Nakamura, "A Study of PRML Systems for Perpendicular Recording Using Double Layered Medium," *IEEE Trans. Magn.*, vol. 36, no. 5, pp. 2164–2166, Sept. 2000.

[8] H. Sawaguchi, Y. Nishida, H. Takano, and H. Aoi, "Performance analysis of modified PRML channels for perpendicular recording systems," *J. Magnetism and Magnetic Materials*, vol. 235, no. 1, pp. 265–272, Oct. 2001.

1 Introduction

Partial response maximum likelihood (PRML) detection method is most popular and plays an important role in magnetic recording systems. The PRML detector consists of a partial response (PR) equalizer and a Viterbi detector for the maximum likelihood detection. In general, a linear equalizer (LE) based on the minimum mean square error (MMSE) using linear filtering model is used for the PR equalizer.

Linear equalizers based on linear models have greatly contributed to statistical signal processing and respective theoretical and practical results are well established [1]. In practice, nonlinear adaptive filtering often becomes desirable if the considered systems have nonlinear characteristics. In magnetic recording systems, when the recording density is very high and there are nonlinearities, the linear equalization method for PR channels has limited performance to compensate for distortions. Therefore, the ML procedure becomes very complex and nonlinear signal processing techniques with moderate complexity are indispensable.

Most popular nonlinear signal processing is Volterra series approach [2]. Volterra series or multivariate polynomial models are prohibitively complex since they need a very large number of coefficients to completely characterize many nonlinear processes. Another nonlinear signal processing technique is neural network-based approach. Neural networks can be one of the alternative methods for channel equalization and signal reception because of their inherent nonlinear architectures. Almost all the equalizers using neural networks show good performance over conventional equalizers while their structures are also too complex.

In this paper, a nonlinear equalizer for high density perpendicular magnetic recording (PMR) channels is proposed based on a bilinear recursive polynomial model. The bilinear polynomial model is widely used as an alternative method to the volterra series or multivariate polynomial model [2]. Equalizers based on the bilinear polynomial model (BPE) show good performance and have simple structures [3], and the nonlinear mapping capability of a polynomial model is well investigated [4]. In order to improve the performance and simplify the structure of the BPE, we apply a bilinear recursive polynomial model to the PMR channel equalization problem and propose

DOI: 10.1587/elex.6.1071
Received January 23, 2009
Accepted July 08, 2009
Published August 10, 2009

IEICE Electronics Express, Vol.6, No.15, 1071–1076

the bilinear recursive polynomial equalizer which is called the BRPE. The BRPE uses the estimated output as its recursive input. The proposed BRPE is applied to the high density PMR channels. Also the BRPE is compared with the MMSE equalizer and the PRML detectors in terms of bit-error rate (BER) obtained by simulations.

The rest of the paper is organized as follows: The perpendicular magnetic recording system is given in Section II and the proposed BRPE is presented in Section III. Section IV provides simulation results. Section V concludes the paper.

2 Perpendicular magnetic recording system [5, 6, 7]

In the nonlinear read channel model for the PMR systems, user data are encoded by a run-length limited (RLL) code and the precoded sequence, $a(k) \in \{-1, +1\}$, of the RLL code at time $k$is recorded on the disk. The magneto-resistive (MR) head produces an output voltage in regions of constant magnetic polarity, and a zero output voltage at magnetic transitions. The isolated transition response for the PMR channels can be approximated by the hyperbolic-tangent function

$$s(t) = A \cdot tanh\left(\frac{2t}{0.579\pi \cdot T_{50}}\right), \tag{1}$$

where A is the zero-to-peak amplitude and T_{50} is the time width required from $s(t)$ to rise from $-A/2$ to $+A/2$. When T_b is the recording bit duration, the normalized recording density, K, is defined as $K = T_{50}/T_b$.

The noise in PMR can be modeled as a mixture of additive white Gaussian noise (AWGN) and media noise, which is assumed to be transition-jitter dominated noise. Therefore, an RLL-encoded nonreturn-to-zero (NRZ) sequence a_k of $\{+1, -1\}$ is scaled by 1/2 and convolved with the dibit response $h(t) = s(t) - s(t - T_b)$. Then the readback signal $r(t)$ is given by

$$r(t) = \sum_{k=-\infty}^{\infty} a(k)h(t - kT_b) + n(t), \tag{2}$$

where $n(t) \equiv n_j(t)+n_w(t)$, $n_j(t) \equiv \sum_{k=-\infty}^{\infty} d(k)s'(t-kT_b)$, $d(k) \equiv \triangle_k(a(k)-a(k-1))$ is a random noise sequence, and $s'(t)$ is the derivative of $s(t)$. Also $n_j(t)$ and $n_w(t)$ represent AWGN and jitter noise, respectively. The sampled sequence of the readback signal $r(t)$ is the input of an equalizer and detector. The channel signal-to-noise ratio (SNR) is defined as

$$SNR = 10\log_{10}\left(\frac{A^2}{\sigma_n^2}\right), \tag{3}$$

where $\sigma_n^2 = \sigma_w^2 + \sigma_j^2||s'(t)||^2$, σ_w^2 is the power of AWGN within a bandwith of $0.5/T_b$ and σ_j^2 is the power of the jitter noise.

3 Equalizer using bilinear recursive polynomial model

The simplified PMR system in Section II can be transformed into an equivalent communication system model with the BRPE as shown in Fig. 1. Let

DOI: 10.1587/elex.6.1071
Received January 23, 2009
Accepted July 08, 2009
Published August 10, 2009

IEICE Electronics Express, Vol.6, No.15, 1071–1076

$a(k)$ be a binary phase shift keying (BPSK) modulated symbol at time k, then the sampled readback signal $r(k)$ at time k, which is the feedforward (FF) input of the BRPE, is given by $r(k) = \sum_n h(n)a(k-n) + n(k)$, where $h(n)$ is the total impulse response of the PMR channel and $n(k)$ is the noise which includes AWGN and jitter noise as in (2).

The number of taps for the FF section and that for the feedback (FB) section are denoted by N_{00} and N_{01}, respectively. The input to the FF section is $\mathbf{r}(k) = [r(k), r(k-1), \cdots, r(k-N_{00}+1)]^T$, where $r(k)$ is an noisy output of the channel. The input to the FB section is $\hat{\mathbf{s}}(k-1) = [\hat{s}(k-1), \cdots, \hat{s}(k-N_{01})]^T$. The value $\hat{s}_{k-1}$ represents the estimated value of the equalizer output at time $k-1$, such as

$$\hat{s}(k-1) = sgn\left(y(k-1)\right) = \begin{cases} -1, & \text{if } \ y(k-1) < 0 \\ 1, & \text{if } \ y(k-1) \geq 0, \end{cases} \tag{4}$$

where

$$y(k) = \sum_{j=1}^{N_{01}} \alpha_j(k)\hat{s}(k-j) + \sum_{i=0}^{N_{00}-1}\sum_{j=1}^{N_{01}} \beta_{ij}(k)\hat{s}(k-j)r(k-i) + \sum_{i=0}^{N_{00}-1} \gamma_i r(k-i), \tag{5}$$

where α_j, β_{ij} and γ_i are the weights of the previously estimated signals, multiplications of previously estimated signals and the received signals, and the received signals, respectively. The weights of the BRPE can be trained by many ways. Among them, the steepest descent gradient-based weight updating algorithm of the BRPE at time $k+1$ for $1 \leq j \leq N_{01}$ and $0 \leq j \leq N_{00}$ is given by as follows:

$$\alpha_j(k+1) = \alpha_j(k) + \mu_b\left(1 - y^2(k)\right)e(k)\hat{s}(n-j), \tag{6}$$

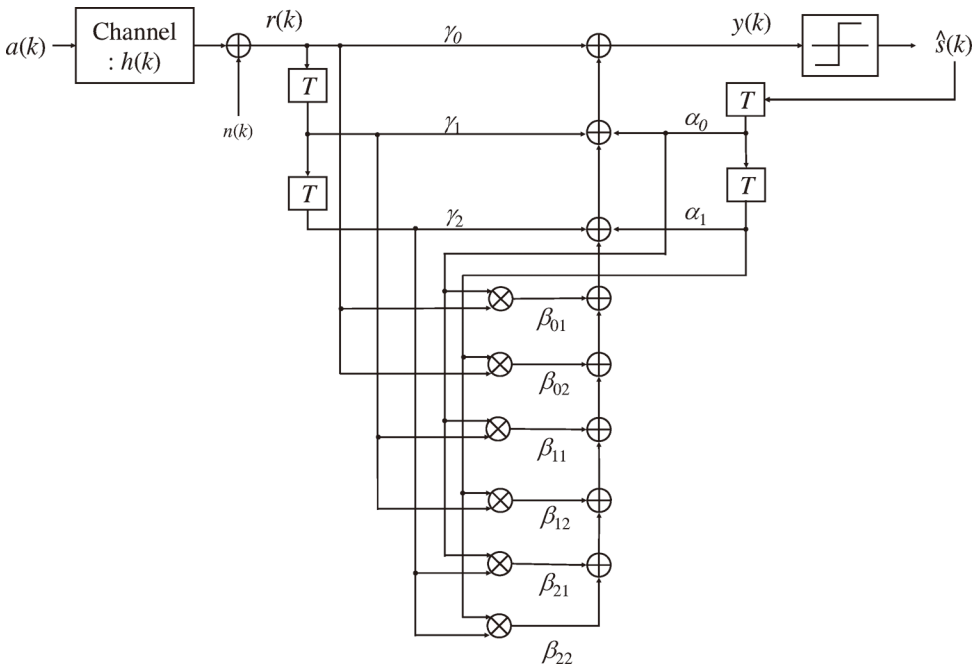

Fig. 1. Proposed BRPE with $N_{00} = 3$ and $N_{01} = 2$ in a simplified digital communication system.

DOI: 10.1587/elex.6.1071
Received January 23, 2009
Accepted July 08, 2009
Published August 10, 2009

IEICE Electronics Express, Vol.6, No.15, 1071–1076

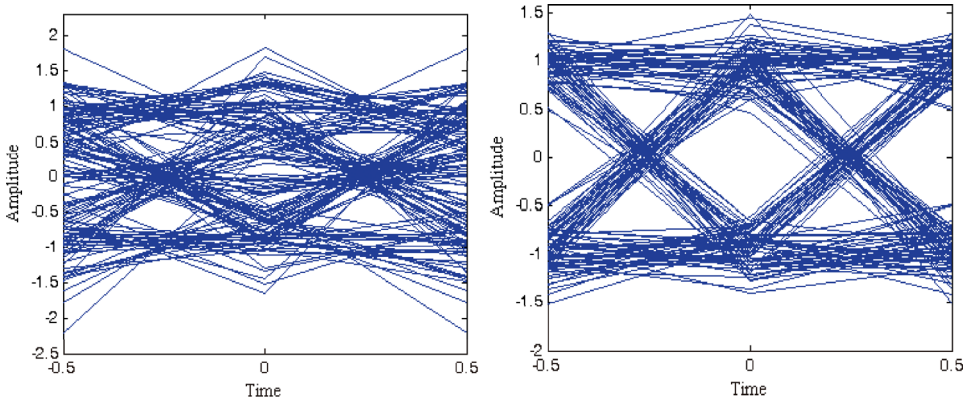

(a) (b)

Fig. 2. Eye diagrams of (a) MMSE and (b) BRPE when $K = 1.6$, SNR $= 19\,\mathrm{dB}$ and AWGN : jitter noise $= 70 : 30$ in the PMR systems.

$$\beta_{ij}(k+1) = \beta_j(k) + \mu_c \left(1 - y^2(k)\right) e(k)\hat{s}(n-j)r(k-i), \tag{7}$$

$$\gamma_i(k+1) = \gamma_i(k) + \mu_b \left(1 - y^2(k)\right) e(k)r(n-i), \tag{8}$$

where $e(k) = d(k) - y(k)$ where $d(k)$ is the training sequence and μ_α, μ_β and μ_γ are the learning rate parameters for $\alpha_j(k)$, $\beta_{ij}(k)$ and $\gamma_i(k)$, respectively. Therefore the total number of weights for the BDFE is $N_{00}(N_{01}) + N_{00} + N_{01}$.

4 Simulation results

In our simulation, we use 25 MMSE equalization taps and BRPE with $N_{00} = 10$, $N_{01} = 5$ and $\mu_\alpha = \mu_\beta = \mu_\gamma = 10^{-4}$ in the PMR channels. The BER performance of the proposed BRPE is compared with the MMSE and PRML in [8]. As the authors' know, the PRML method in [8] has the best BER performance in the PMR channels.

Fig. 2 shows the eye diagrams for the MMSE equalizer in (a) and the BRPE in (b), respectively, when the recording density $K = 1.6$, the SNR is 19 dB, and the ratio of the power of AWGN to the power of the jitter noise is $70 : 30$ in the total noise $n(t)$ of (2). These results show that the output signals of BRPE are clearer than those of MMSE in the same PMR systems.

Fig. 3 (a) shows the required SNRs to obtain the BER of 10^{-3} for the BRPE, PRML[4752][−1 1], and PRML[1672] as the ratio of the jitter noise in the noise of (2) increases when the recording density $K = 1.6$. It can be seen from Fig. 3 (a) that the BER performances of BRPE are always better than the PRML[4752][1 −1]. Compared to the PRML[1672], the BRPE shows the worse BER performances when there is small amount of the jitter noise while the BRPE shows the better BER performances when the ratio of the jitter noise increases. When the recording density $K = 1.9$ and the ratio of AWGN to the jitter noise is $70 : 30$, Fig. 3 (b) shows the BER performances of the MMSE, BRPE, PRML[4752][−1 1], and PRML[1672]. The BRPE shows the better or similar BER performances compared to the PRML methods.

DOI: 10.1587/elex.6.1071
Received January 23, 2009
Accepted July 08, 2009
Published August 10, 2009

IEICE Electronics Express, Vol.6, No.15, 1071–1076

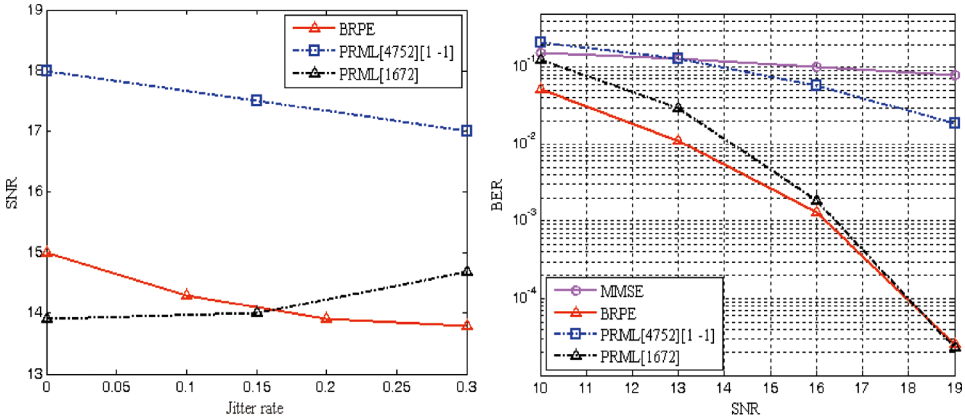

(a) (b)

Fig. 3. (a) Required SNRs for the PRML methods and the proposed BRPE when $K = 1.6$ according to various jitter ratios and (b) BER performances of the MMSE, PRML and BRPE methods when $K = 1.9$ and AWGN : jitter noise = 70 : 30 in the PMR systems.

5 Conclusions

In order to enhance the performance of the conventional linear equalizers, the BRPE based on bilinear recursive polynomial model is proposed. Through simulation results it was found that the proposed BRPE with a moderate complexity is capable of augmenting the BER performances of the other linear equalizers. Despite of low complexity, the performance of BRPE is analogous to the PRML[1672] which is more complex than the proposed BRPE. The BER performances of the BRPE are obtained from only the equalization procedure while the BER performances of the PRML methods are obtained from the PR equalization by the linear equalizer and ML detection procedures. Therefore, the proposed BRPE is a feasible alternative to the equalization method for PMR systems. In addition, when we use the BRPE as the PR equalizer instead of the conventional PR linear equalizer for the conventional PRML methods, we could get a better BER performance than the conventional PRML methods. The BRPE equalizer can be adopted as the PR equalizer for the PRML if the channel for the BRPE is changed to the PR target channel.

Acknowledgments

This work was supported by Samsung Electronics.

DOI: 10.1587/elex.6.1071
Received January 23, 2009
Accepted July 08, 2009
Published August 10, 2009